Agilent InfinityLab LC Series

1260 Infinity II SFC Binary Pump

User Manual

Agilent Technologies

Notices

Manual Part Number

G4782-90000

Edition

02/2017

Printed in Germany

Agilent Technologies
Hewlett-Packard-Strasse 8
76337 Waldbronn

Warranty

The material contained in this document is provided "as is," and is subject to being changed, without notice, in future editions. Further, to the maximum extent permitted by applicable law, Agilent disclaims all warranties, either express or implied, with regard to this manual and any information contained herein, including but not limited to the implied warranties of merchantability and fitness for a particular purpose. Agilent shall not be liable for errors or for incidental or consequential damages in connection with the furnishing, use, or performance of this document or of any information contained herein. Should Agilent and the user have a separate written agreement with warranty terms covering the material in this document that conflict with these terms, the warranty terms in the separate agreement shall control.

Technology Licenses

The hardware and/or software described in this document are furnished under a license and may be used or copied only in accordance with the terms of such license.

Restricted Rights Legend

If software is for use in the performance of a U.S. Government prime contract or subcontract, Software is delivered and licensed as "Commercial computer software" as defined in DFAR 252.227-7014 (June 1995), or as a "commercial item" as defined in FAR 2.101(a) or as "Restricted computer software" as defined in FAR 52.227-19 (June 1987) or any equivalent agency regulation or contract clause. Use, duplication or disclosure of Software is subject to Agilent Technologies' standard commercial license terms, and non-DOD Departments and Agencies of the U.S. Government will receive no greater than Restricted Rights as defined in FAR 52.227-19(c)(1-2) (June 1987). U.S. Government users will receive no greater than Limited Rights as defined in FAR 52.227-14 (June 1987) or DFAR 252.227-7015 (b)(2) (November 1995), as applicable in any technical data.

Safety Notices

CAUTION

A **CAUTION** notice denotes a hazard. It calls attention to an operating procedure, practice, or the like that, if not correctly performed or adhered to, could result in damage to the product or loss of important data. Do not proceed beyond a **CAUTION** notice until the indicated conditions are fully understood and met.

WARNING

A WARNING notice denotes a hazard. It calls attention to an operating procedure, practice, or the like that, if not correctly performed or adhered to, could result in personal injury or death. Do not proceed beyond a WARNING notice until the indicated conditions are fully understood and met.

In This Guide...

This manual covers the Agilent InfinityLab LC Series 1260 Infinity II SFC Binary Pump (G4782A).

1 Introduction

This chapter gives an introduction to the module and an instrument overview.

2 Site Requirements and Specifications

This chapter provides information about site requirements and specifications for the binary pump.

3 Using the Pump

This chapter explains the operational parameters of the Binary Pump.

4 Optimizing Performance

This chapter gives information on how to optimize the performance of the Binary Pump under special operational conditions.

5 Troubleshooting and Diagnostics

Overview of the troubleshooting and diagnostic features.

6 Error Information

This chapter describes the meaning of error messages, and provides information on probable causes and suggested actions how to recover from error conditions.

7 Test Functions and Calibration

This chapter explains all test functions that are available for the binary pump.

8 Maintenance

This chapter describes the maintenance and repair of the module.

9 Parts and Materials for Maintenance

This chapter lists all parts and tools that are required for maintenance and simple repairs.

10 Identifying Cables

This chapter provides information on cables used with the Agilent InfinityLab LC Series modules.

11 Hardware Information

This chapter provides detailed technical information about your binary pump.

12 LAN Configuration

This chapter provides information on connecting the module to the Agilent ChemStation PC.

13 Appendix

This chapter provides addition information on safety, legal and web.

Contents

1 Introduction

This chapter gives an introduction to the module and an instrument overview.

Instrument and Operation

Introduction to the Pump

The binary pump comprises two identical pumps integrated into one housing. Binary gradients are created by high-pressure mixing. A built-in degasser is available for applications that require best flow stability, especially at low flow rates, for maximum detector sensitivity. The pump is capable of delivering flow in the range of 0.1 – 5 mL/min against up to 600 bar. A solvent selection valve allows to form binary mixtures (isocratic or gradient). Active seal wash is available for up to three modifier solvents on channel B, while channel A is always the CO_2 delivering channel.

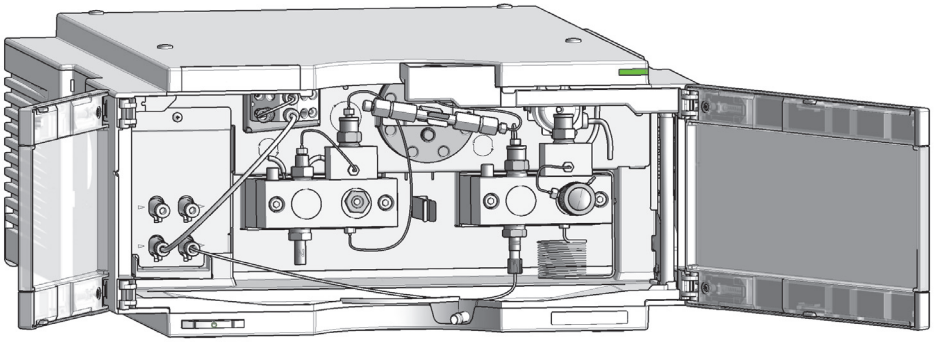

Figure 1 Overview of the pump

Principle of Operation

The binary pump is based on a two-channel, dual-piston in-series design which comprises all essential functions that a solvent delivery system has to fulfill. Metering of solvent and delivery to the high-pressure side are performed by two pump assemblies which can generate pressure up to 600 bar.

Each channel comprises a pump assembly including pump drive, pump head, and outlet valve. The two channels are fed into cross connector which is connected to a damping unit and a mixer. A pressure sensor monitors the pump pressure. A purge valve with integrated PTFE frit is fitted to the Pump Head B outlet for convenient priming of the modifier channel.

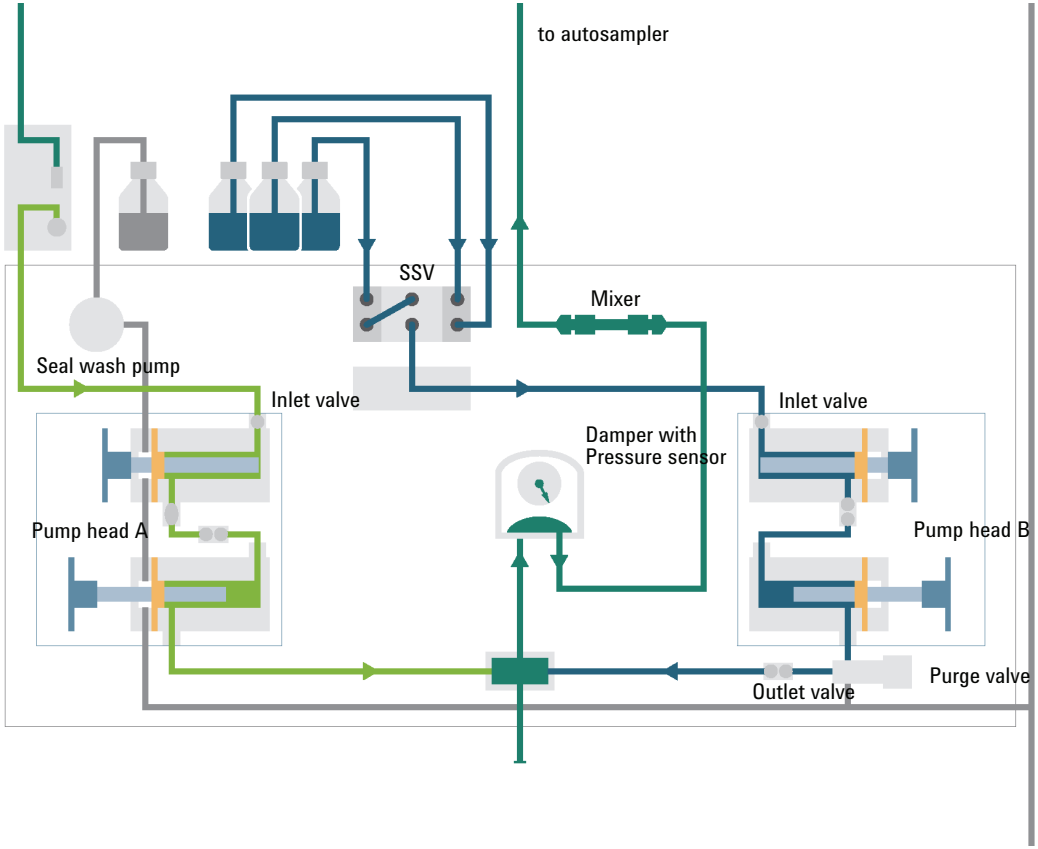

For pump specifications, see “Performance Specifications” on page 28.

Product Description

The 1260 Infinity II SFC Binary pump is equipped with passive inlet valves and with special seals and valves to allow for CO_2 pumping in channel A while channel B adds organic modifier for either isocratic or gradient performance. Pump head B is also equipped with a purge valve to allow for quick changeover of the organic modifier. In addition, it has an integrated solvent selection 2-channel degasser and built-in active seal-wash on channel A for increased uptime

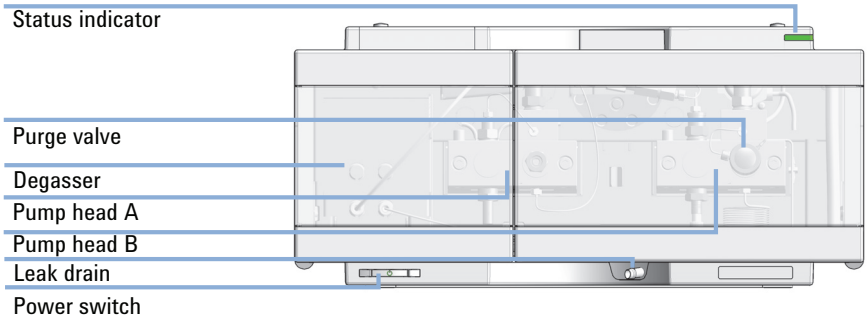

Figure 2 Overview of the pump.

Features

- Fast and precise gradients - the pump is the perfect choice for fast and precise gradients using UV-only, as well as SFC/MS systems.
- Power range combining high pressure up to 600 bar and flow rates up to 5 mL/min for maximum SFC performance.
- Integrated 2-channel degasser change-over of solvents for purging and priming the pump.
- Built-in active seal-wash for increased uptime.
- Integrated Solvent Selection Valve.

Overview of the Hydraulic Path

The solvent from the bottle in the solvent cabinet enters the pump through an active inlet valve. Each side of the binary pump comprises two substantially identical pump units. Both pump units comprise a ball-screw drive and a pump head with two sapphire pistons for reciprocating movement.

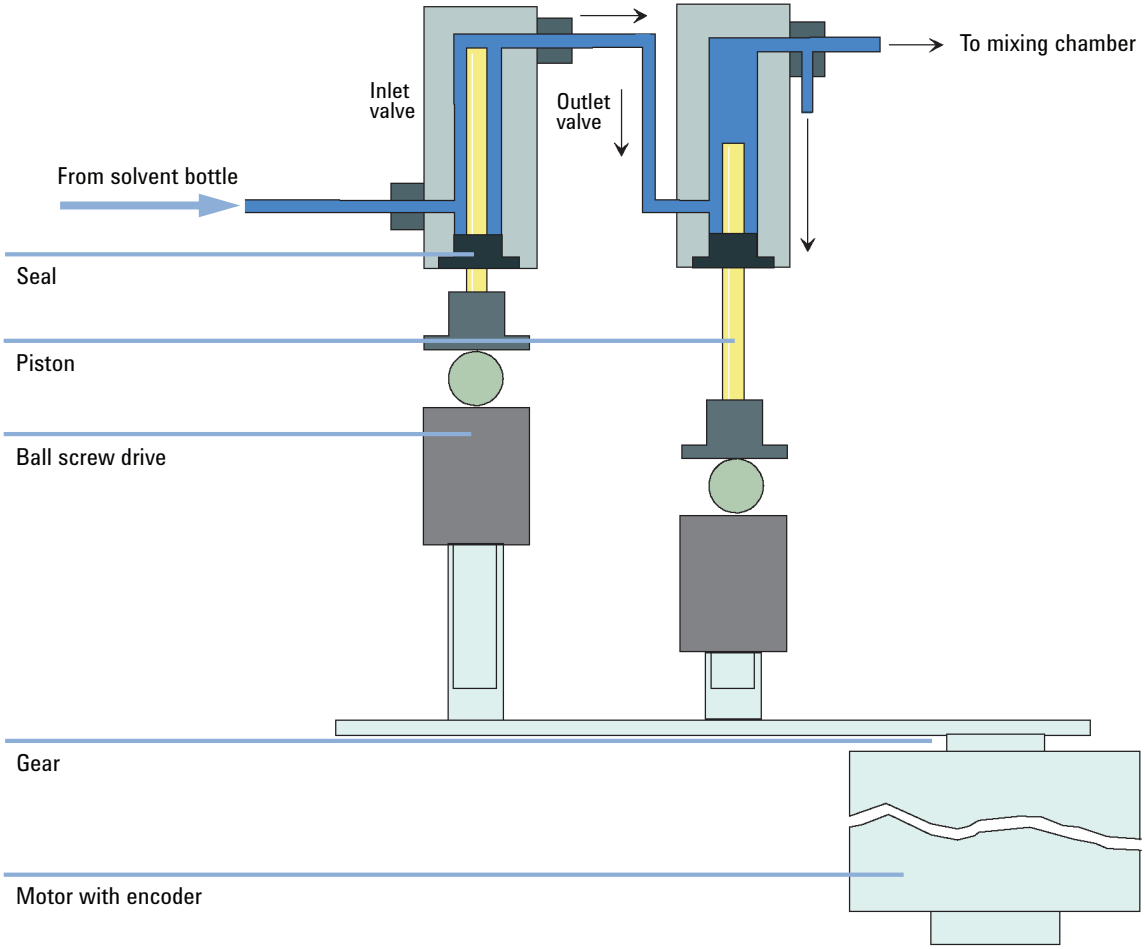

Figure 3 Pump head

A servo-controlled variable reluctance motor drives the two ball-screw drives in opposite directions. The gears for the ball-screw drives have different circumferences (ratio 2:1) allowing the first piston to move at double the speed of the second piston. The solvent enters the pump heads close to the bottom limit and leaves it at its top. The outer diameter of the piston is smaller than the inner diameter of the pump-head chamber allowing the solvent to fill the gap in between. The first piston has a stroke volume in the range of 20 µL to 100 µL depending on the flow rate. The microprocessor controls all flow rates in a range of 1 µL/min to 5 mL/min. The inlet of the first pumping unit is connected to the active inlet valve which is processor-controlled opened or closed allowing solvent to be drawn into the first pump unit.

When turned on, the pump runs through an initialization procedure to determine the upper dead center of the first piston of both pump channels. The first piston moves slowly upwards to the mechanical stop of the pump head and from there it moves back a predetermined path length. The controller stores this piston position in memory. After this initialization the pump starts operation with the set parameters for the two pump channels.

The inlet valve is opened and the down moving piston draws solvent into the first pump head. At the same time the second piston is moving upwards delivering into the system. After a controller defined stroke length (depending on the flow rate) the drive motors are stopped and the inlet valve is closed. The motor direction is reversed and moves the first piston up until it reaches the stored upper limit and at the same time moving the second piston downwards.

Then the sequence starts again moving the pistons up and down between the two limits. During the delivery stroke of the first piston the solvent in the pump head is pressed through the outlet valve into the second pumping unit. The second piston draws in half of the volume displaced by the first piston and the remaining half volume is directly delivered into the system. During the drawing stroke of the first piston, the second piston delivers the drawn volume into the system.

What is Solvent Compressibility Compensation?

Although the compressibility of liquids is orders of magnitude lower than the compressibility of gases, without correction a noticeable volume error would be seen if typical chromatographic solvents are compressed to operating pressures as high as 600 bar. In addition, the compressibility depends on pressure, temperature and the amount of dissolved gas. In order to minimize

the influence of the latter, the use of a vacuum degasser is mandatory for a high flow and composition precision. Unfortunately, the influence of the temperature on compressibility is non-linear and cannot be calculated.

The Agilent 1260 Infinity II Binary Pump features a multi point compressibility calibration. The compressibility of a solvent is determined at different pressures from 0 – 600 bar and stored in an XML file. This file can be distributed to other pumps because the solvent compressibility is independent from the pump.

The binary pump and ChemStation come with predetermined solvent compressibility data for the most common HPLC solvents like water, acetonitrile, methanol, etc. Users can calibrate their own solvent mixtures with the help of an easy to use calibration procedure in the Agilent Lab Advisor software.

Let us use the practical example from the last section once again to understand how compressibility compensation works:

Piston 1 draws solvent at ambient pressure. The movement direction is reversed and piston 1 now compresses the solvent until the operating pressure of the HPLC system is reached. The outlet valve opens, and solvent is pumped by piston 1 into pump chamber 2.

Without any compensation, the delivered volume at operating pressure would be too low. In addition, it would take a noticeable amount of time to recompress the solvent to operating pressure. During this time frame, no solvent would be delivered into the system and as a result a high pressure fluctuation (known as *pressure ripple*) would be observed.

When both solvent compressibility at the current operating pressure and pump elasticity are known, the pump can automatically correct for the missing volume by drawing the appropriate larger solvent volume at ambient pressure and speed up the piston during the recompression phase in the first pump chamber. As a result, the pump delivers the accurate volume with any (calibrated) solvent at any pressure at a greatly reduced pressure ripple. For applications that require lowest transition volume of the pump, damper and mixer can be bypassed.

How Does Variable Stroke Volume Work?

The smaller the solvent volume in the pump chamber is, the faster it can be recompressed to operating pressure. The binary pump allows to manually or automatically adjust the pump stroke volume of the first piston in the range of 20 – 100 µL. Due to the compression of the solvent volume in the first pump chamber, each piston stroke of the pump will generate a small pressure pulsation, influencing the flow ripple of the pump. The amplitude of the pressure pulsation mainly depends on the stroke volume and the compressibility compensation for the solvent in use. Small stroke volumes generate less pressure pulsation than larger stroke volumes at the same flow rate. In addition, the frequency of the pressure pulsation will be higher. This will decrease the influence of flow pulsations on retention times.

In gradient mode, a smaller stroke volume results in less flow ripple and reduces the composition ripple.

The binary pump uses a processor-controlled ball screw system for driving its pistons. The normal stroke volume is optimized for the selected flow rate. Small flow rates use a small stroke volume while higher flow rates use a higher stroke volume.

The stroke volume for the pump is by default set to AUTO mode. This means that the stroke is optimized for the flow rate in use. A change to larger stroke volumes is possible but not recommended.

Leak and Waste Handling

The Agilent InfinityLab LC Series has been designed for safe leak and waste handling. It is important that all security concepts are understood and instructions are carefully followed.

The solvent cabinet is designed to store a maximum volume of 8 L solvent. The maximum volume for an individual bottle stored in the solvent cabinet should not exceed 2 L. For details, see the usage guideline for the Agilent 1200 Infinity Series Solvent Cabinets (a printed copy of the guideline has been shipped with the solvent cabinet, electronic copies are available on the Internet).

All leak plane outlets are situated in a consistent position so that all Infinity and Infinity II modules can be stacked on top of each other. Waste tubes are guided through a channel on the right hand side of the instrument, keeping the front access clear from tubes.

The leak plane provides leak management by catching all internal liquid leaks, guiding them to the leak sensor for leak detection, and passing them on to the next module below, if the leak sensor fails. The leak sensor in the leak plane stops the running system as soon as the leak detection level is reached.

Solvent and condensate is guided through the waste channel into the waste container:

- from the detector's flow cell outlet
- from the Multisampler needle wash port
- from the Sample Cooler (condensate)
- from the Seal Wash Sensor
- from the pump's Purge Valve or Multipurpose Valve

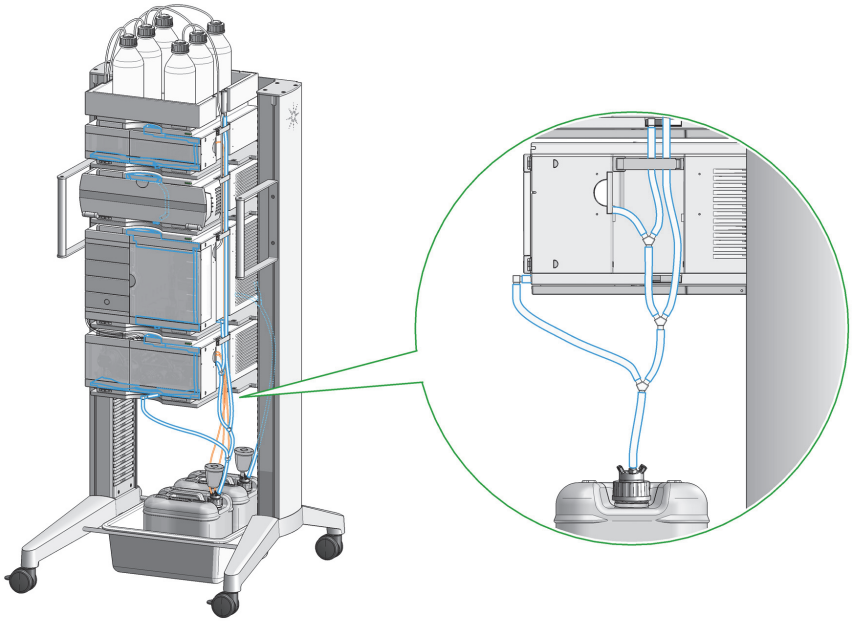

Figure 4 Infinity II Leak Waste Concept (flexible rack installation)

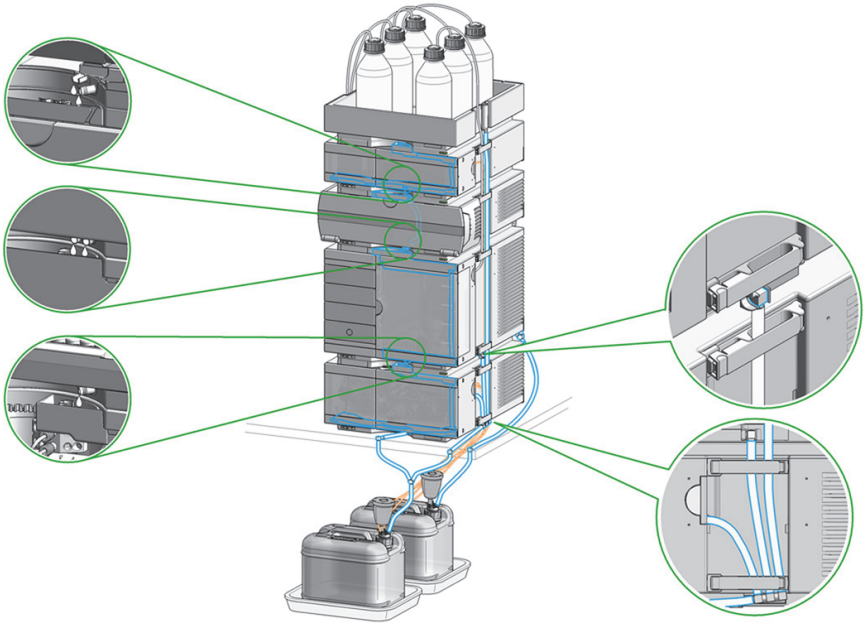

Figure 5 Infinity II Single Stack Leak Waste Concept (bench installation)

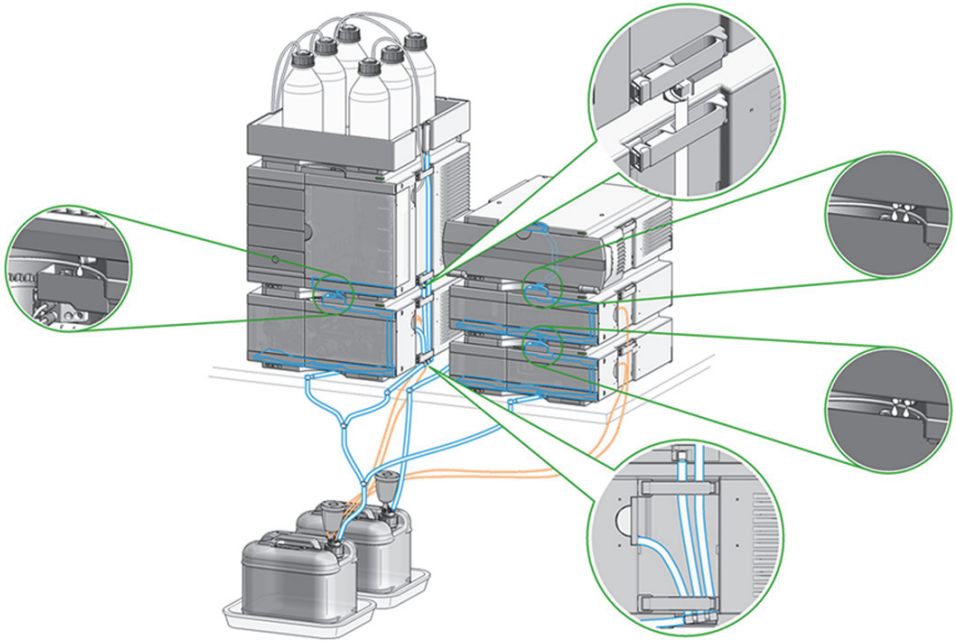

Figure 6 Infinity II Two Stack Leak Waste Concept (bench installation)

The waste tube connected to the leak pan outlet on each of the bottom instruments guides the solvent to a suitable waste container.

Waste Concept

1 Agilent recommends using the 6 L waste can with 1 Stay Safe cap GL45 with 4 ports (5043-1221) for optimal and safe waste disposal. If you decide to use your own waste solution, make sure that the tubes don't immerse in the liquid.

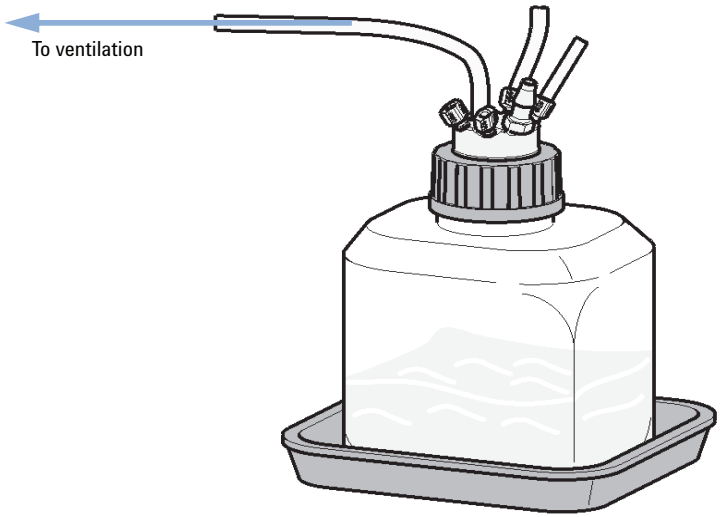

2
Site Requirements and Specifications

This chapter provides information about site requirements and specifications for the binary pump.

Site Requirements

A suitable environment is important to ensure optimal performance of the instrument.

Power Considerations

The module power supply has wide ranging capability. It accepts any line voltage in the range described in Table 1 on page 27. Consequently there is no voltage selector in the rear of the module. There are also no externally accessible fuses, because automatic electronic fuses are implemented in the power supply.

WARNING

Hazard of electrical shock or damage of your instrumentation

can result, if the devices are connected to a line voltage higher than specified.

➔ Connect your instrument to the specified line voltage only.

WARNING

The module is partially energized when switched off, as long as the power cord is plugged in.

Repair work at the module can lead to personal injuries, e.g. electrical shock, when the cover is opened and the module is connected to power.

➔ Always unplug the power cable before opening the cover.

➔ Do not connect the power cable to the instrument while the covers are removed.

WARNING

Inaccessible power plug.

In case of emergency it must be possible to disconnect the instrument from the power line at any time.

- ➔ Make sure the power connector of the instrument can be easily reached and unplugged.
- ➔ Provide sufficient space behind the power socket of the instrument to unplug the cable.

Power Cords

Country-specific power cords are available for the module. The female end of all power cords is identical. It plugs into the power-input socket at the rear. The male end of each power cord is different and designed to match the wall socket of a particular country or region.

Agilent makes sure that your instrument is shipped with the power cord that is suitable for your particular country or region.

WARNING

Absence of ground connection

The absence of ground connection can lead to electric shock or short circuit.

- ➔ Never operate your instrumentation from a power outlet that has no ground connection.

WARNING

Unintended use of supplied power cords

Using power cords for unintended purposes can lead to personal injury or damage of electronic equipment.

- ➔ Never use a power cord other than the one that Agilent shipped with this instrument.
- ➔ Never use the power cords that Agilent Technologies supplies with this instrument for any other equipment.
- ➔ Never use cables other than the ones supplied by Agilent Technologies to ensure proper functionality and compliance with safety or EMC regulations.

WARNING

Power cords

Solvents may damage electrical cables.

→ Prevent electrical cables from getting in contact with solvents.

→ Exchange electrical cables after contact with solvents.

Bench Space

The module dimensions and weight (see Table 1 on page 27) allow you to place the module on almost any desk or laboratory bench. It needs an additional 2.5 cm (1.0 inches) of space on either side and approximately 8 cm (3.1 inches) in the rear for air circulation and electric connections.

If the bench shall carry a complete HPLC system, make sure that the bench is designed to bear the weight of all modules.

The module should be operated in a horizontal position.

NOTE

Agilent recommends that you install the HPLC instrument in the InfinityLab Flex Bench rack. This option helps to save bench space as all modules can be placed into one single stack. It also allows to easily relocate the instrument to another Lab.

Condensation

CAUTION

Condensation within the module

Condensation can damage the system electronics.

→ Do not store, ship or use your module under conditions where temperature fluctuations could cause condensation within the module.

→ If your module was shipped in cold weather, leave it in its box and allow it to warm slowly to room temperature to avoid condensation.

Physical Specifications

Table 1 Physical Specifications

Type	Specification	Comments
Weight	17.6 kg (38.8 lbs)	
Dimensions (height × width × depth)	180 x 396 x 436 mm (7.1 x 15.6 x 17.2 inches)	
Line voltage	100 – 240 V~, ± 10 %	Wide-ranging capability
Line frequency	50 or 60 Hz, ± 5 %	
Power consumption	90 VA / 74 W	
Ambient operating temperature	4–55 °C (39–131 °F)	
Ambient non-operating temperature	-40 – 70 °C (-40 – 158 °F)	
Humidity	< 95 % r.h. at 40 °C (104 °F)	Non-condensing
Operating altitude	Up to 3000 m (9842 ft)	
Non-operating altitude	Up to 4600 m (15092 ft)	For storing the module
Safety standards: IEC, EN, CSA, UL	Installation category II, Pollution degree 2	For indoor use only.
ISM Classification	ISM Group 1 Class B	According to CISPR 11

Performance Specifications

Table 2 Performance Specifications 1260 Infinity II SFC Binary Pump (G4782A)

Type	Specification	Comments
Hydraulic system	Two dual piston in series pumps with servo-controlled variable stroke drive, power transmission by gears and ball screws, floating pistons	
Flow range	Settable: 0.001 – 5 mL/min	Recommended: 1.0 – 5.0 mL/min
Flow precision	≤0.07 % RSD or < 0.02 min SD, whichever is greater	Based on retention time at constant temperature
Pressure operating range	Up to 60 MPa (600 bar, 8702 psi) up to 5 mL/min	
Compressibility compensation	Pre-defined, based on mobile phase compressibility	
Recommended pH range	1.0 – 12.5	Solvents with pH < 2.3 should not contain acids that attack stainless steel
Gradient formation	High-pressure binary mixing	
Delay volume	*Standard delay volume configuration*:600 – 900 µL, (includes 400 µL mixer), dependent on back pressure	
Composition range	settable: 0 – 100 %	
Composition precision	< 0.15 % RSD or < 0.04 min SD, whichever is greater	Based on retention time at constant temperature
Integrated degassing unit	Number of channels: 2 Internal volume per channel: 1.5 mL	

Table 2 Performance Specifications 1260 Infinity II SFC Binary Pump (G4782A)

Type	Specification	Comments
Instrument Control	Lab Advisor B.02.09 or above LC and CE Drivers A.02.16 or above	For details about supported software versions refer to the compatibility matrix of your version of the LC and CE Drivers
Local control	Agilent Instant Pilot (G4208A)	B.02.19 or above
Communications	Controller-area network (CAN), Extended Remote Interface (ERI), Local Area Network (LAN)	
Safety and maintenance	Extensive diagnostics, error detection and display through Agilent LabAdvisor, leak detection, safe leak handling, leak output signal for shutdown of the pumping system. Low voltage in major maintenance areas.	
GLP features	Early maintenance feedback (EMF) for continuous tracking of instrument usage in terms of seal wear and volume of pumped mobile phase with pre-defined and user settable limits and feedback messages. Electronic records of maintenance and errors.	
Housing	All materials are recyclable	

3
Using the Pump

This chapter explains the operational parameters of the Binary Pump.

Magnets

1 This stack exemplarily shows the magnets' positions in the modules.

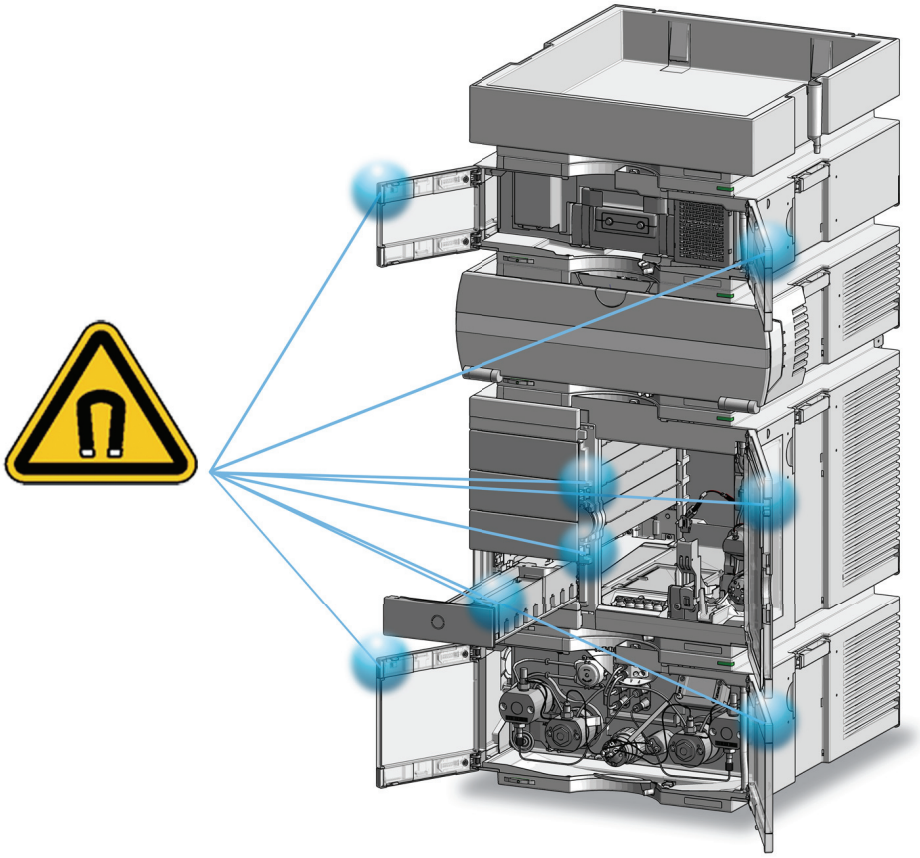

Turn on/off

1 Plug in power cord 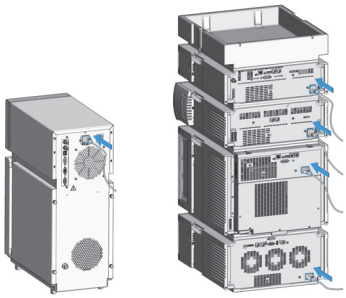	**2** 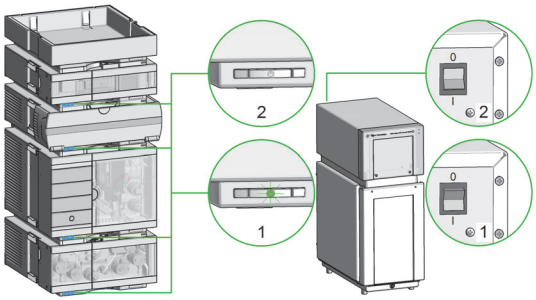 Power switch (1) On (2) Off
3 Plug off the module. 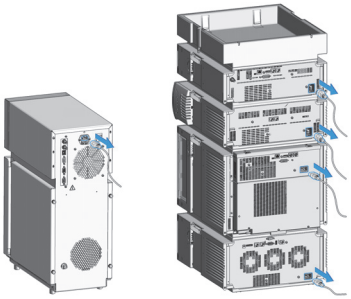	

Status Indicators

1 The module status indicator indicates one of six possible module conditions:

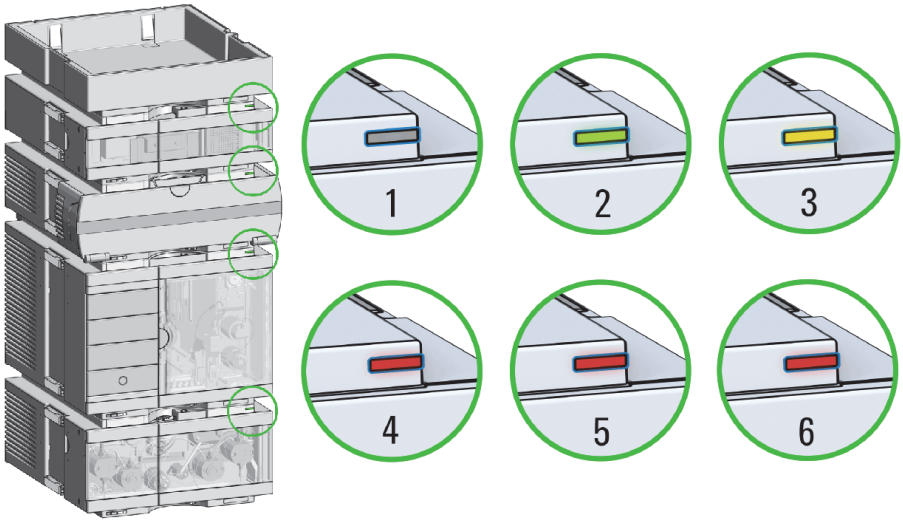

Status indicators

1. Idle

2. Run mode

3. Not-ready. Waiting for a specific pre-run condition to be reached or completed.

4. Error mode - interrupts the analysis and requires attention (for example a leak or defective internal components).

5. Resident mode (blinking) - for example during update of main firmware.

6. Bootloader mode (fast blinking). Try to re-boot the module or try a cold-start. Then try a firmware update.

Best Practices

Daily / Weekly tasks

Daily tasks

- Replace mobile phase based on water/buffer.
- Replace organic mobile phase latest every second day.
- Check seal wash solvent.

Weekly tasks

- Change seal wash solvent (10 % / 90 % isopropanol/water) and bottle.
- Flush all channels with water at 2.5 – 3 mL/min for 5 min to remove salt deposits if buffer applications were used.
- Inspect solvent filters for dirt or blockages. Clean or exchange if no flow is coming out of the solvent line when removed from the degasser inlet.

Power up / Shut-down the pump

Power up the pump

- Use new or different mobile phase (as required).
- Purge pump heads with 2.5 – 3 mL/min for 5 min.
- Stabilize the system by running for 10 – 20 min.

Long-term shut-down of the system

- Flush system with water to remove buffer.
- Remove all samples from the sampler and store according to good laboratory practice.
- Use recommended solvents to store the system.
- Power off the system.

Prepare the pump

Purge

Use the Purge function to:

- fill the pump,
- exchange a solvent,
- remove air bubbles in tubes and pump heads.

Seal wash

Seal Wash guarantees a maximum seal life time. Use Seal Wash:

- When using buffers with elevated salt concentrations
- When using volatile solvents with non-volatile additives

CAUTION

Contaminated seal wash solvent

→ Do not recycle seal wash solvent to avoid contamination.

→ Weekly exchange seal wash solvent.

How to deal with solvents

- Use clean bottles only.
- Exchange water-based solvents daily.
- Select solvent volume to be used up within 1 – 2 days.
- Use only HPLC-grade solvents and water filtered through 0.2 µm filters.
- Label bottles correctly with bottle content, and filling date / expiry date.
- Use solvent inlet filters.
- Reduce risk of algae growth: use brown bottles for aqueous solvents, avoid direct sunlight.

Leak and Waste Handling

WARNING

Toxic, flammable and hazardous solvents, samples and reagents

The handling of solvents, samples and reagents can hold health and safety risks.

- When working with these substances observe appropriate safety procedures (for example by wearing goggles, safety gloves and protective clothing) as described in the material handling and safety data sheet supplied by the vendor, and follow good laboratory practice.
- Do not use solvents with an auto-ignition temperature below 200 °C (392 °F). Do not use solvents with a boiling point below 56 °C (133 °F).
- Avoid high vapor concentrations. Always keep the temperature in the sample compartment at least 25 K below the boiling point of the solvent used.
- Do not operate the instrument in an explosive atmosphere.
- Reduce the volume of substances to the minimum required for the analysis.
- Never exceed the maximum permissible volume of solvents (8 L) in the solvent cabinet. Do not use bottles that exceed the maximum permissible volume as specified in the usage guideline for solvent cabinet.
- Ground the waste container.
- Regularly check the filling level of the waste container. The residual free volume in the waste container must be large enough to collect the waste liquid.
- To achieve maximal safety, regularly check the tubing for correct installation.

NOTE

For details, see the usage guideline for the solvent cabinet. A printed copy of the guideline has been shipped with the solvent cabinet, electronic copies are available in the Agilent Information Center or via the Internet.

For details on correct installation, see separate installation documentation.

Waste Concept

1 Agilent recommends using the 6 L waste can with 1 Stay Safe cap GL45 with 4 ports (5043-1221) for optimal and safe waste disposal. If you decide to use your own waste solution, make sure that the tubes don't immerse in the liquid.

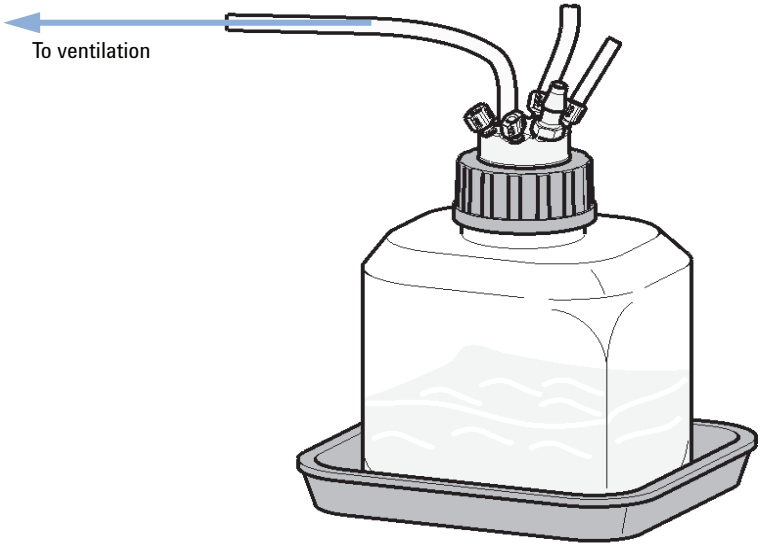

Hints for Successful Use of the Binary Pump

- Place solvent cabinet with the solvent bottles always on top (or at a higher level) of the pump.
- Flush the degasser with at least 5 mL per channel before operating the pump, especially when the pumping system had been turned off for a certain length of time (for example, overnight) and volatile solvent mixtures are used in the channels.
- Prevent blocking of solvent inlet filters (never use the pump without solvent inlet filters). Growth of algae should be avoided (see "Prevent Blocking of Solvent Filters" on page 53).
- Check purge valve frit and column frit in regular time intervals. A blocked purge valve frit can be identified by black, yellow or greenish layers on its surface or by a pressure greater than 10 bar in low delay volume configuration and 20 bar in standard configuration when pumping distilled water at a rate of 5 mL/min with an open purge valve.
- Whenever possible use a minimum flow rate of 5 µL/min per solvent channel to avoid crossflow of solvent into the unused pump channel.
- Whenever exchanging the pump seals, the purge valve frit should be exchanged, too.
- Check the pump pistons for scratches, grooves and dents when changing the piston seals. Damaged pistons cause micro leaks and will decrease the lifetime of the seals.
- After changing the piston seals, apply the seal wear-in procedure (see "Seal Wear-in Procedure Channel B" on page 115).

Setting up the Pump with the G4208A Instant Pilot

Generic operation of the G4208A Instant Pilot is covered in the Agilent Instant Pilot G4208A User's Guide (G4208-90006). Details about setting up module specific parameters can be found in the Instant Pilot online help.

The pump parameters are described in detail in “Overview” on page 41.

Setting up the Pump with the Instrument Control Interface

Overview

Parameters described in following sections is offered by the instrument control interface and can usually be accessed through Agilent instrument control software. For details, please refer to manuals and online help of respective user interfaces.

Setup of Basic Pump Parameters

The most important parameters of the pump are listed in Table 3 on page 41.

Table 3 Basic pump parameters

Parameter	Limits	Description
• **Flow**	0.001 – 5 mL/min	Total flow rate of the pump.
• **Stop Time**	0.01 min - no limit	The stop time of the pump usually controls the run time of the whole LC system. Use **no limit** to stop the run manually (useful for method development).
• **Post Time**	off - 99999 min	Time between the end of a run and the start of the next. Used for column equilibration after a gradient.
• **Pressure Limits**	**Max**: 0 – 600 bar **Min**: 0 – 600 bar	**Max** must be bigger than **Min**! Set max pressure to the maximum operating pressure of your column. A min pressure setting of e.g. 10 bar will turn off your pump automatically when running out of solvent. A smarter way, however, is to use the bottle fillings function (see "Bottle Filling" on page 44).
• **Solvent A**	0 – 100 %	Although channel A can be set to 0 %, it cannot be turned off. This channel should be used for the aqueous phase (water).
• **Solvent B**	off - 100 %	The percentage of channel B is automatically complemented by channel A to give 100 %.
• Solvent type	H_2O, ACN, MeOH, IPA CO^2pre-compressed	Select the solvent you are using in the respective solvent channel from the drop-down list. In case your solvent is not listed, perform a solvent compressibility calibration.

Table 3 Basic pump parameters

Parameter	Limits	Description
• Solvent Comment		Free text field for a description of the solvent. This description will show up in method printouts, etc.
• **Timetable**	max. number of lines depends on free space in pump memory	Use the timetable to build solvent gradients, flow gradients, or combinations of both. Gradients are always linear. Use multiple timetable entries to mimic exponential or parabolic gradients.
• **Display**		There are three ways to display the timetable: • in tabular form • as flow/pressure graph • as solvent percentage plot Values can only be changed in tabular view.

Pump Control

The pump can be switched between following states: **On**, **Off** or to **Standby**. In **Standby**, the pump motor is still controlled. When the pump is switched on from standby, it does not re-initialize.

CAUTION

Upon initialization, the pump ignores the Maximum Flow Gradient value.

This can result in a rapid and uncontrolled pressure increase.

➔ To prevent harm to the column, open the purge valve until the initialization is finished.

The optional seal wash pump can be controlled by either switching it off, using it for a single time or specifying frequency and duration of periodic wash intervals.

Auxiliary Pump Parameters

The auxiliary pump parameters are pre-set to fit most applications. Adjustments should only be made when required. Table 4 on page 43 shows the available auxiliary parameters with their default values.

CAUTION

Upon initialization, the pump ignores the Maximum Flow Gradient value.

This can result in a rapid and uncontrolled pressure increase.

➔ To prevent harm to the column, open the purge valve until the initialization is finished.

Table 4 Auxiliary pump parameters

Parameter	Limits	Description
• **Maximum Flow Gradient**	0.1 – 100 mL/min² default: 100 mL/min²	With this parameter flow rate changes can be ramped up and down slowly to avoid pressure shocks to the column. The default value is 100 mL/min² which in fact turns the function off.
• **Minimum Stroke**	20 – 100 µL default: Auto	The volume one pump piston delivers per stroke. In general, a smaller stroke volume results in lower pump ripple. The **Auto** setting adjusts the strokes dynamically to the lowest possible value. The strokes can be set individually for pump heads A and B.
• **Compressibility**	0 - 150·10^{-6} /bar or enhanced compressibility calibration default: use enhanced comp. calibration	For best performance, check option **Use enhanced compressibility calibration**. With this option, the pump will use solvent data libraries provided by Agilent or data generated by using solvent compressibility calibrations. For backward compatibility to 400 bar pumps, the solvent compressibility can still be set manually for each channel when the box is unticked.

Data Curves

The binary pump provides the possibility to store the following operational data in the data file of the Agilent data system:

- Solvent percentage for each channel,
- pump flow,
- pressure

NOTE The pressure data curve is *generated* from the pressure sensor readings, while %A, %B and flow are *calculated* from the method settings of the pump.

For details, please refer to the online help or manual of your instrument control software.

Bottle Filling

The pump offers a powerful feature to monitor the liquid level in the solvent bottles. With total bottle volume and initial filling volume set correctly, the pump subtracts the consumed volume continuously from the initial value and stops the pump and method/sequence execution before the system runs dry or an analysis is corrupted.

CAUTION The bottle filling feature fails if multiple solvent inlets are put into one solvent bottle!

➔ In that case implement a minimum pressure limit to avoid that the pump runs dry when solvents are empty.

Table 5 on page 44 lists the available bottle filling parameters.

Table 5 Bottle Filling Parameters

Parameter	Limits	Description
• **Total Volume**	0 – 1000 L default: 0 L	This is the capacity (maximum possible volume) in liter of the solvent bottle. In combination with the actual volume, this parameter is used for calculating and displaying the relative liquid level.
• **Actual Volume**	0 – 1000 L default: 0 L	After filling the solvent bottles, enter the actual volumes into these boxes. The **Actual Volume** must not be larger than the **Total Volume** of the bottle.

Table 5 Bottle Filling Parameters

Parameter	Limits	Description
• **Prevent analysis.....**	default: unchecked	If this option is checked, the pump won't start a new run if the solvent level in one or more bottles is below the minimum volume. Enter a minimum volume in liter, which considers the position of the solvent inlet and size/shape of the solvent bottle such that no air is drawn if the actual volume gets close to this limit.
• **Turn pump off...**	default: unchecked	If this option is checked, the pump will turn off before air is aspirated. However, the residual solvent volume has been calculated for 1 L solvent bottles and may be too small for large bottles or other vessels.

Solvent Information

Observe the following recommendations on the use of solvents.

- Follow recommendations for avoiding the growth of algae, see "Algae Growth in HPLC Systems" on page 52
- Small particles can permanently block capillaries and valves. Therefore, always filter solvents through 0.22 µm filters.
- Avoid or minimize the use of solvents that may corrode parts in the flow path. Consider specifications for the pH range given for different materials like flow cells, valve materials etc. and recommendations in subsequent sections.

Materials in Flow Path

Following materials are used in the flow path of this module:

Table 6 Materials in flow path

Part	Materials
Degasser chamber	TFE/PDD Copolymer, PFA (internal tubings), PEEK (inlets), FEP (tubings), ETFE (fittings)
SSV	PEEK, FFKM
Active inlet valve	SST, sapphire, ruby, ceramic, PTFE
Outlet valve	SST, gold, ruby, ZrO_2-based ceramic, tantalum
Adapter	SST, gold
Pump head (body)	SST
Pistons	Sapphire
Piston seals/wash seals	PTFE, SST (reversed phase) or UHMW-PE, SST (normal phase)
Pressure sensor	SST
Purge valve	SST, gold, PTFE, ceramic

Table 6 Materials in flow path

Part	Materials
Damping unit	SST, gold
Capillaries/fittings	SST
Tubings	PTFE

Material Information

Materials in the flow path are carefully selected based on Agilent's experiences in developing highest quality instruments for HPLC analysis over several decades. These materials exhibit excellent robustness under typical HPLC conditions. For any special condition, please consult the material information section or contact Agilent.

Disclaimer

Subsequent data were collected from external resources and are meant as a reference. Agilent cannot guarantee the correctness and completeness of such information. Data is based on compatibility libraries, which are not specific for estimating the long-term life time under specific but highly variable conditions of UHPLC systems, solvents, solvent mixtures and samples. Information can also not be generalized due to catalytic effects of impurities like metal ions, complexing agents, oxygen etc. Apart from pure chemical corrosion, other effects like electro corrosion, electrostatic charging (especially for non-conductive organic solvents), swelling of polymer parts etc. need to be considered. Most data available refers to room temperature (typically 20 – 25 °C, 68 – 77 °F). If corrosion is possible, it usually accelerates at higher temperatures. If in doubt, please consult technical literature on chemical compatibility of materials.

PEEK

PEEK (Polyether-Ether Ketones) combines excellent properties regarding biocompatibility, chemical resistance, mechanical and thermal stability. PEEK is therefore the material of choice for UHPLC and biochemical instrumentation.

It is stable in the specified pH range (for the Bio-inert LC system: pH 1 – 13, see bio-inert module manuals for details), and inert to many common solvents.

There is still a number of known incompatibilities with chemicals such as chloroform, methylene chloride, THF, DMSO, strong acids (nitric acid > 10 %, sulphuric acid > 10 %, sulfonic acids, trichloroacetic acid), halogenes or aequous halogene solutions, phenol and derivatives (cresols, salicylic acid etc.).

When used above room temperature, PEEK is sensitive to bases and various organic solvents, which can cause it to swell. Under such conditions normal PEEK capillaries are very sensitive to high pressure. Therefore Agilent uses stainless-steel cladded PEEK capillaries in bio-inert systems. The use of stainless steel cladded PEEK capillaries keeps the flow path free of steel and ensures pressure stability to at least 600 bar. If in doubt, consult the available literature about the chemical compatibility of PEEK.

Polyimide

Agilent uses semi-crystalline polyimide for rotor seals in valves and needle seats in autosamplers. One supplier of polyimide is DuPont, which brands polyimide as Vespel, which is also used by Agilent.

Polyimide is stable in a pH range between 1 and 10 and in most organic solvents. It is incompatible with concentrated mineral acids (e.g. sulphuric acid), glacial acetic acid, DMSO and THF. It is also degraded by nucleophilic substances like ammonia (e.g. ammonium salts in basic conditions) or acetates.

Polyethylene (PE)

Agilent uses UHMW (ultra-high molecular weight)-PE/PTFE blends for yellow piston and wash seals, which are used in 1290 Infinity pumps and for normal phase applications in 1260 Infinity pumps.

Polyethylene has a good stability for most common inorganic solvents including acids and bases in a pH range of 1 to 12.5. It is compatible to many organic solvents used in chromatographic systems like methanol, acetonitrile and isopropanol. It has limited stability with aliphatic, aromatic and halogenated hydrocarbons, THF, phenol and derivatives, concentrated acids and bases. For normal phase applications, the maximum pressure should be limited to 200 bar.

Tantalum (Ta)

Tantalum is inert to most common HPLC solvents and almost all acids except fluoric acid and acids with free sulfur trioxide. It can be corroded by strong bases (e.g. hydroxide solutions > 10 %, diethylamine). It is not recommended for the use with fluoric acid and fluorides.

Stainless Steel (ST)

Stainless steel is inert against many common solvents. It is stable in the presence of acids and bases in a pH range of 1 to 12.5. It can be corroded by acids below pH 2.3. It can also corrode in following solvents:

- Solutions of alkali halides, their respective acids (for example, lithium iodide, potassium chloride, and so on) and aqueous solutions of halogens.
- High concentrations of inorganic acids like nitric acid, sulfuric acid and organic solvents especially at higher temperatures (replace, if your chromatography method allows, by phosphoric acid or phosphate buffer which are less corrosive against stainless steel).
- Halogenated solvents or mixtures which form radicals and/or acids, for example:

  $2\ CHCl_3 + O_2 \rightarrow 2\ COCl_2 + 2\ HCl$

  This reaction, in which stainless steel probably acts as a catalyst, occurs quickly with dried chloroform if the drying process removes the stabilizing alcohol.
- Chromatographic grade ethers, which can contain peroxides (for example, THF, dioxane, di-isopropylether). Such ethers should be filtered through dry aluminium oxide which adsorbs the peroxides.
- Solutions of organic acids (acetic acid, formic acid, and so on) in organic solvents. For example, a 1 % solution of acetic acid in methanol will attack steel.
- Solutions containing strong complexing agents (for example, EDTA, ethylene diamine tetra-acetic acid).
- Mixtures of carbon tetrachloride with 2-propanol or THF.

Titanium (Ti)

Titanium is highly resistant to oxidizing acids (for example, nitric, perchloric and hypochlorous acid) over a wide range of concentrations and temperatures.

This is due to a thin oxide layer on the surface, which is stabilized by oxidizing compounds. Non-oxidizing acids (for example, hydrochloric, sulfuric and phosphoric acid) can cause slight corrosion, which increases with acid concentration and temperature. For example, the corrosion rate with 3 % HCl (about pH 0.1) at room temperature is about 13 µm/year. At room temperature, titanium is resistant to concentrations of about 5 % sulfuric acid (about pH 0.3). Addition of nitric acid to hydrochloric or sulfuric acids significantly reduces corrosion rates. Titanium is sensitive to acidic metal chlorides like $FeCl_3$ or $CuCl_2$. Titanium is subject to corrosion in anhydrous methanol, which can be avoided by adding a small amount of water (about 3 %). Slight corrosion is possible with ammonia > 10 %.

Diamond-Like Carbon (DLC)

Diamond-Like Carbon is inert to almost all common acids, bases and solvents. There are no documented incompatibilities for HPLC applications.

Fused silica and Quartz (SiO_2)

Fused silica is used in 1290 Infinity Flow Cells and capillaries. Quartz is used for classical flow cell windows. It is inert against all common solvents and acids except hydrofluoric acid and acidic solvents containing fluorides. It is corroded by strong bases and should not be used above pH 12 at room temperature. The corrosion of flow cell windows can negatively affect measurement results. For a pH greater than 12, the use of flow cells with sapphire windows is recommended.

Gold

Gold is inert to all common HPLC solvents, acids and bases within the specified pH range. It can be corroded by complexing cyanides and concentrated acids like aqua regia.

Zirconium Oxide (ZrO_2)

Zirconium Oxide is inert to almost all common acids, bases and solvents. There are no documented incompatibilities for HPLC applications.

Platinum/Iridium

Platinum/Iridium is inert to almost all common acids, bases and solvents. There are no documented incompatibilities for HPLC applications.

Fluorinated polymers (PTFE, PFA, FEP, FFKM)

Fluorinated polymers like PTFE (polytetrafluorethylene), PFA (perfluoroalkoxy) and FEP (fluorinated ethylene propylene) are inert to almost all common acids, bases, and solvents. FFKM is perfluorinated rubber, which is also resistant to most chemicals. As an elastomer, it may swell in some organic solvents like halogenated hydrocarbons.

TFE/PDD copolymer tubings, which are used in all Agilent degassers except 1322A, are not compatible with fluorinated solvents like Freon, Fluorinert, or Vertrel. They have limited life time in the presence of Hexafluoroisopropanol (HFIP). To ensure the longest possible life with HFIP, it is best to dedicate a particular chamber to this solvent, not to switch solvents, and not to let dry out the chamber. For optimizing the life of the pressure sensor, do not leave HFIP in the chamber when the unit is off.

Sapphire, Ruby and Al_2O_3-based ceramics

Sapphire, ruby and ceramics based on aluminum oxide Al_2O_3 are inert to almost all common acids, bases and solvents. There are no documented incompatibilities for HPLC applications.

Algae Growth in HPLC Systems

The presence of algae in HPLC systems can cause a variety of problems that may be incorrectly diagnosed as instrument or application problems. Algae grow in aqueous media, preferably in a pH range of 4-8. Their growth is accelerated by buffers, for example phosphate or acetate. Since algae grow through photosynthesis, light will also stimulate their growth. Even in distilled water small-sized algae grow after some time.

Instrumental Problems Associated With Algae

Algae deposit and grow everywhere within the HPLC system causing:

- Blocked solvent filters or deposits on inlet or outlet valves resulting in unstable flow, composition or gradient problems or a complete failure of the pump.
- Small pore high pressure solvent filters, usually placed before the injector to plug resulting in high system pressure.
- PTFE frits blockage leading to increased system pressure.
- Column filters to plug giving high system pressure.
- Flow cell windows of detectors to become dirty resulting in higher noise levels (since the detector is the last module in the flow path, this problem is less common).

How to Prevent and/or Reduce the Algae Problem

- Always use freshly prepared solvents, especially use demineralized water which was filtered through about 0.2 µm filters.
- Never leave mobile phase in the instrument for several days without flow.
- Always discard old mobile phase.
- Use the amber solvent bottle (Solvent bottle, amber (9301-1450)) supplied with the instrument for your aqueous mobile phase.
- If possible add a few mg/l sodium azide or a few percent organic solvent to the aqueous mobile phase.

Prevent Blocking of Solvent Filters

Contaminated solvents or algae growth in the solvent bottle will reduce the lifetime of the solvent filter and will influence the performance of the module. This is especially true for aqueous solvents or phosphate buffers (pH 4 to 7). The following suggestions will prolong lifetime of the solvent filter and will maintain the performance of the module.

- Use a sterile, if possible amber, solvent bottle to slow down algae growth.
- Filter solvents through filters or membranes that remove algae.
- Exchange solvents every two days or refilter.
- If the application permits add 0.0001 – 0.001 M sodium azide to the solvent.
- Place a layer of argon on top of your solvent.
- Avoid exposure of the solvent bottle to direct sunlight.

NOTE Never use the system without solvent filter installed.

Checking the Solvent Filters

The solvent filters are located on the low-pressure side of the binary pump. A blocked filter therefore does not necessarily affect the high pressure readings of the pump. The pressure readings cannot be used to check whether the filters are blocked or not. If the solvent cabinet is placed on top of the binary pump, the filter condition can be checked in the following way:

Remove the solvent inlet tube from the inlet port of the solvent selection valve or the adapter at the active inlet valve. If the filter is in good condition, the solvent will freely drip out of the solvent tube (due to hydrostatic pressure). If the solvent filter is partly blocked only very little solvent will drip out of the solvent tube.

WARNING

When opening capillary or tube fittings, solvents may leak out.

The handling of toxic and hazardous solvents and reagents can carry health risks.

→ Observe appropriate safety procedures (for example, wear goggles, safety gloves and protective clothing) as described in the material handling and safety data sheet supplied by the solvent vendor, especially when toxic or hazardous solvents are used.

Cleaning the Solvent Filters

- Remove the blocked solvent filter from the bottle-head assembly and place it in a beaker with concentrated nitric acid (35%) for one hour.
- Thoroughly flush the filter with HPLC-grade water (remove all nitric acid, some capillary columns can be damaged by nitric acid).
- Replace the filter.

NOTE

Never use the system without solvent filter installed.

Normal Phase Applications

Current passive inlet valves and outlet ball valves used with 1260 and 1290 Infinity pumps do not work well with applications using non-polar solvents as for normal phase applications (e.g. hexane, heptane and CO_2). With such applications, pressure drops could be observed. They are a result of particles electrostatically charging up in insulating solvents and sticking to the balls inside the valves, such that the valves do not close properly any more after some time of use (can be hours).

For normal phase applications, a second type of valves is available, which has a design based on the existing one for 1260 and 1290 Infinity valves. These valves use a new material for valve balls, which is a conductive ceramic and replaces non-conductive ruby balls. The balls do not charge up electrostatically and show good performance in normal phase.

The valves are marked with N for non-polar or normal phase.

Agilent recommends using these valves for (and only for) normal phase applications.

CAUTION

Corrosion of valves

Normal phase balls/valves corrode quickly in aqueous solutions and acids (at or below pH 7).

→ Do not use normal phase valves in applications running with aqueous solutions.

The N-Valves have been tested successfully in using hexane at pressures below 100 bar; heptane can be used as a substitute for neurotoxic hexane.

Seals for Normal Phase Applications

For running normal phase applications on 1200 Infinity Series pumps, yellow PE seals are required, which exist as piston seals and wash seals. Seal wash is very uncommon for normal phase applications (no buffers needed), but wash seals are needed for seal wash pump heads.

1290 Infinity pumps use PE seals by default. In combination with ceramic pistons, PE seals are used for both reversed phase (1200 bar) and normal phase applications.

1260 Infinity pumps use sapphire pistons and black PTFE piston and wash seals by default (600 bar). Such PTFE seals create small wear particles in normal phase applications, which can clog valves and other parts in the flow path.

PE seals have a limited life time when used with normal phase solvents and sapphire pistons. Agilent recommends a maximum pressure of 200 bar for this combination, which shall also be applied for pressure tests.

Choice of Normal Phase Valves and Seals

Table 7 Recommended valves and seals for normal phase applications

	1260 Infinity	1290 Infinity
Inlet valves	1260 Infinity Inlet Valve Type N (G1312-60166)	1290 Infinity Inlet Valve Type N (G4220-60122) 1290 Infinity Quat Inlet Valve Type N (G4204-60122)
Outlet valves	1260 Infinity Outlet Valve Type N/SFC (G1312-60167)	1290 Infinity Outlet Valve Type N (G4220-60128)
Seals	PE seals (pack of 2) (0905-1420) Wash Seal PE (0905-1718)	

4
Optimizing Performance

This chapter gives information on how to optimize the performance of the Binary Pump under special operational conditions.

When to Use a Vacuum Degasser

A degasser removes air, which is dissolved in any solvent. When solvents are heated or mixed with other solvents, air can leave the solvent and form small bubbles. Over time, these bubbles accumulate and can cause pressure fluctuations which may finally result in retention time shifts.

All Agilent 1200 Infinity II Series Pumps have a built-in degasser. While a degasser is needed for low pressure mixing pumps like Agilent quaternary pumps, high pressure mixing pumps like Agilent binary pumps are more robust with respect to bubble formation. However, a degasser is recommended for best performance.

Additionally, a degasser is highly recommended for the following applications:

- Your detector is used with maximum sensitivity in the low UV wavelength range.
- Your application requires highest injection precision.
- Your application requires highest retention-time reproducibility (flow rates below 0.5 mL/min).
- The binary pump is used with bypassed damper and mixer.

The external 1260 Infinity II Degasser G7122A is recommended for use with applications using highly volatile solvents like Hexane or DCM, solvents with special characteristics like THF, or applications using refractive index detection.

Operational Hints for the Vacuum Degasser

If you are using the vacuum degasser for the first time, if the vacuum degasser was switched off for any length of time (for example, overnight), or if the vacuum degasser chambers are empty, you have to prime the vacuum degasser before running an analysis. Priming is usually done by pumping at a high flow rate (3 – 5 mL/min). Alternatively, a syringe can be used to draw the solvent through the (empty) degasser if the pump does not aspirate the solvent by itself.

When to Use the Active Seal Wash Option

Concentrated buffer solutions will reduce the lifetime of the seals and pistons in your binary pump. The active seal wash option allows to maintain the seal lifetime by flushing the low pressure side of the seals with a wash solvent.

The seal wash option is strongly recommended if buffer concentrations of 0.1 M or higher are used regularly with the pump.

The active seal wash option kit can be ordered by quoting Active Seal Wash Upgrade Product including Service (G1399A).

The seal wash option comprises a peristaltic pump, secondary seals, gaskets, seal holders and tubing for both pump heads. A bottle of premixed water/isopropanol (90/10 vol%) is placed in the solvent cabinet and connected to the peristaltic pump as described in the technical note that comes with the active seal wash kit.

Always use a mixture of HPLC-grade water (90 %) and isopropanol (10 %) as wash solvent. This mixture prevents bacteria growth in the wash bottle and reduces the surface tension of the water.

NOTE In order to avoid accumulation of buffer salts or impurities, regularly replace the washing solution using fresh solvents.

The operation of the peristaltic pump can be controlled from the data system or the Instant Pilot.

For adding a seal-wash option, please contact your local Agilent Technologies service representative.

How to Optimize the Compressibility Compensation Setting

When a solvent is metered at ambient pressure and compressed to a higher pressure, the volume decreases depending on its compressibility. Solvent compressibility is a non-linear function of pressure and temperature. It is specific for each solvent.

In order to deliver the desired flow accurately at all pressures, Agilent pumps use a compressibility compensation. For standard LC applications, e.g. using a 400 bar binary pump, an average compressibility value for the solvent is sufficient.

For the 600 bar 1260 Infinity II Binary Pump , the pressure-dependency of a solvent compressibility needs to be considered. It is determined at different pressures between 0 – 600 bar. The pump uses the obtained non-linear function to select the correct compressibility value for the actual pump pressure. Compressibility data for the most common solvents is readily available in the pump firmware.

The compensation algorithm is so powerful that the damper and mixer can be removed from the pump flow path at low flow rate while the pressure ripple and composition ripple remain at low levels.

For method compatibility reasons, the legacy compressibility compensation is still available.

Optimization of Legacy Compressibility Settings

The compressibility compensation default settings are 50×10^{-6} /bar (best for most aqueous solutions) for pump head A and 115×10^{-6} /bar (to suit organic solvents) for pump head B. The settings represent average values for aqueous solvents (A side) and organic solvents (B side). Therefore it is always recommended to use the aqueous solvent on the A side of the pump and the organic solvent on the B side. Under normal conditions, the default settings reduce the pressure pulsation to below 2 % of system pressure, which is sufficient for most applications. If the compressibility values for the solvents used differ from the default settings, it is recommended to change the

compressibility values accordingly. Compressibility settings can be optimized by using the values for various solvents described in Table 8 on page 61. If the solvent in use is not listed in the compressibility table, when using premixed solvents and if the default settings are not sufficient for your application, the following procedure can be used to optimize the compressibility settings:

1. Start channel A of the binary pump with the required flow rate.
2. Before starting the optimization procedure, the flow must be stable. Use degassed solvent only. Check the tightness of the system with the pressure test (see).
3. Your pump must be connected to an Agilent data system or Instant Pilot, the pressure- and %-ripple can be monitored with one of these instruments.
4. Start the recording device in plot mode.
5. Starting with a compressibility setting of 40×10^{-6} /bar, increase the value in steps of 10. The compressibility compensation setting that generates the smallest pressure ripple is the optimum value for your solvent composition.
6. Repeat step 1 through step 5 for the B channel of your binary pump.

Table 8 Solvent Compressibility

Solvent (pure)	Compressibility (10^{-6}/bar)
Acetone	126
Acetonitrile	115
Benzene	95
Carbon tetrachloride	110
Chloroform	100
Cyclohexane	118
Ethanol	114
Ethyl acetate	104
Heptane	120
Hexane	150
Isobutanol	100
Isopropanol	100

Table 8 Solvent Compressibility

Solvent (pure)	Compressibility (10^{-6}/bar)
Methanol	120
1-Propanol	100
Toluene	87
Water	46

5
Troubleshooting and Diagnostics

Overview of the troubleshooting and diagnostic features.

Overview of the Module's Indicators and Test Functions

Status Indicators

The module is provided with two status indicators which indicate the operational state of the module. The status indicators provide a quick visual check of the operation of the module.

Error Messages

In the event of an electronic, mechanical or hydraulic failure, the module generates an error message in the user interface. For each message, a short description of the failure, a list of probable causes of the problem, and a list of suggested actions to fix the problem are provided (see chapter Error Information).

Test Functions

A series of test functions are available for troubleshooting and operational verification after exchanging internal components (see Tests and Calibrations).

Agilent Lab Advisor Software

The Agilent Lab Advisor Software is a standalone product that can be used with or without a chromatographic data system. Agilent Lab Advisor helps to manage the lab for high-quality chromatographic results by providing a detailed system overview of all connected analytical instruments with instrument status, Early Maintenance Feedback counters (EMF), instrument configuration information, and diagnostic tests. By the push of a button, a detailed diagnostic report can be generated. Upon request, the user can send this report to Agilent for a significantly improved troubleshooting and repair process.

The Agilent Lab Advisor software is available in two versions:

- Lab Advisor Basic
- Lab Advisor Advanced

Lab Advisor Basic is included with every Agilent 1200 Infinity Series and Agilent InfinityLab LC Series instrument.

The Lab Advisor Advanced features can be unlocked by purchasing a license key, and include real-time monitoring of instrument actuals, all various instrument signals, and state machines. In addition, all diagnostic test results, calibration results, and acquired signal data can be uploaded to a shared network folder. The Review Client included in Lab Advisor Advanced allows to load and examine the uploaded data no matter on which instrument it was generated. This makes Data Sharing an ideal tool for internal support groups and users who want to track the instrument history of their analytical systems.

The optional Agilent Maintenance Wizard Add-on provides an easy-to-use, step-by-step multimedia guide for performing preventive maintenance on Agilent 1200 Infinity and Agilent InfinityLab LC Series instrument.

The tests and diagnostic features that are provided by the Agilent Lab Advisor software may differ from the descriptions in this manual. For details, refer to the Agilent Lab Advisor software help files.

6
Error Information

This chapter describes the meaning of error messages, and provides information on probable causes and suggested actions how to recover from error conditions.

What Are Error Messages

Error messages are displayed in the user interface when an electronic, mechanical, or hydraulic (flow path) failure occurs which requires attention before the analysis can be continued (for example, repair, or exchange of consumables is necessary). In the event of such a failure, the red status indicator at the front of the module is switched on, and an entry is written into the module logbook.

If an error occurs outside a method run, other modules will not be informed about this error. If it occurs within a method run, all connected modules will get a notification, all LEDs get red and the run will be stopped. Depending on the module type, this stop is implemented differently. For example, for a pump the flow will be stopped for safety reasons. For a detector, the lamp will stay on in order to avoid equilibration time. Depending on the error type, the next run can only be started, if the error has been resolved, for example liquid from a leak has been dried. Errors for presumably single time events can be recovered by switching on the system in the user interface.

Special handling is done in case of a leak. As a leak is a potential safety issue and may have occurred at a different module from where it has been observed, a leak always causes a shutdown of all modules, even outside a method run.

In all cases, error propagation is done via the CAN bus or via an APG/ERI remote cable (see documentation for the APG/ERI interface).

General Error Messages

Timeout

Error ID: 0062

The timeout threshold was exceeded.

Probable cause	Suggested actions
1 The analysis was completed successfully, and the timeout function switched off the module as requested.	Check the logbook for the occurrence and source of a not-ready condition. Restart the analysis where required.
2 A not-ready condition was present during a sequence or multiple-injection run for a period longer than the timeout threshold.	Check the logbook for the occurrence and source of a not-ready condition. Restart the analysis where required.

Shutdown

Error ID: 0063

An external instrument has generated a shutdown signal on the remote line.

The module continually monitors the remote input connectors for status signals. A LOW signal input on pin 4 of the remote connector generates the error message.

Probable cause	Suggested actions
1 Leak detected in another module with a CAN connection to the system.	Fix the leak in the external instrument before restarting the module.
2 Leak detected in an external instrument with a remote connection to the system.	Fix the leak in the external instrument before restarting the module.
3 Shut-down in an external instrument with a remote connection to the system.	Check external instruments for a shut-down condition.
4 The degasser failed to generate sufficient vacuum for solvent degassing.	Check the vacuum degasser for an error condition. Refer to the *Service Manual* for the degasser or the pump that has the degasser built-in.

Remote Timeout

Error ID: 0070

A not-ready condition is still present on the remote input. When an analysis is started, the system expects all not-ready conditions (for example, a not-ready condition during detector balance) to switch to run conditions within one minute of starting the analysis. If a not-ready condition is still present on the remote line after one minute the error message is generated.

Probable cause	Suggested actions
1 Not-ready condition in one of the instruments connected to the remote line.	Ensure the instrument showing the not-ready condition is installed correctly, and is set up correctly for analysis.
2 Defective remote cable.	Exchange the remote cable.
3 Defective components in the instrument showing the not-ready condition.	Check the instrument for defects (refer to the instrument's documentation).

Lost CAN Partner

Error ID: 0071

During an analysis, the internal synchronization or communication between one or more of the modules in the system has failed.

The system processors continually monitor the system configuration. If one or more of the modules is no longer recognized as being connected to the system, the error message is generated.

Probable cause	Suggested actions
1 CAN cable disconnected.	• Ensure all the CAN cables are connected correctly. • Ensure all CAN cables are installed correctly.
2 Defective CAN cable.	Exchange the CAN cable.
3 Defective main board in another module.	Switch off the system. Restart the system, and determine which module or modules are not recognized by the system.

Leak

Error ID: 0064

A leak was detected in the module.

The signals from the two temperature sensors (leak sensor and board-mounted temperature-compensation sensor) are used by the leak algorithm to determine whether a leak is present. When a leak occurs, the leak sensor is cooled by the solvent. This changes the resistance of the leak sensor which is sensed by the leak-sensor circuit on the main board.

Probable cause	Suggested actions
1 Loose fittings.	Ensure all fittings are tight.
2 Broken capillary.	Exchange defective capillaries.
3 Loose or leaking purge valve, inlet valve, or outlet valve.	Ensure pump components are seated correctly. If there are still signs of a leak, exchange the appropriate seal (purge valve, inlet valve, outlet valve).
4 Defective pump seals.	Exchange the pump seals.

Leak Sensor Open

Error ID: 0083

The leak sensor in the module has failed (open circuit).

The current through the leak sensor is dependent on temperature. A leak is detected when solvent cools the leak sensor, causing the leak-sensor current to change within defined limits. If the current falls outside the lower limit, the error message is generated.

Probable cause	Suggested actions
1 Leak sensor not connected to the Power Switch board.	Please contact your Agilent service representative.
2 Defective leak sensor.	Please contact your Agilent service representative.
3 Leak sensor incorrectly routed, being pinched by a metal component.	Please contact your Agilent service representative.
4 Power switch assembly defective	Please contact your Agilent service representative.

Leak Sensor Short

Error ID: 0082

The leak sensor in the module has failed (short circuit).

The current through the leak sensor is dependent on temperature. A leak is detected when solvent cools the leak sensor, causing the leak sensor current to change within defined limits. If the current increases above the upper limit, the error message is generated.

Probable cause	Suggested actions
1 Defective leak sensor.	Please contact your Agilent service representative.
2 Leak sensor incorrectly routed, being pinched by a metal component.	Please contact your Agilent service representative.
3 Power switch assembly defective	Please contact your Agilent service representative.

Compensation Sensor Open

Error ID: 0081

The ambient-compensation sensor (NTC) on the main board in the module has failed (open circuit).

The resistance across the temperature compensation sensor (NTC) on the main board is dependent on ambient temperature. The change in resistance is used by the leak circuit to compensate for ambient temperature changes. If the resistance across the sensor increases above the upper limit, the error message is generated.

Probable cause	Suggested actions
1 Defective main board.	Please contact your Agilent service representative.

Compensation Sensor Short

Error ID: 0080

The ambient-compensation sensor (NTC) on the main board in the module has failed (open circuit).

The resistance across the temperature compensation sensor (NTC) on the main board is dependent on ambient temperature. The change in resistance is used by the leak circuit to compensate for ambient temperature changes. If the resistance across the sensor falls below the lower limit, the error message is generated.

Probable cause	Suggested actions
1 Defective main board.	Please contact your Agilent service representative.

Fan Failed

Error ID: 0068

The cooling fan in the module has failed.

The hall sensor on the fan shaft is used by the main board to monitor the fan speed. If the fan speed falls below a certain limit for a certain length of time, the error message is generated.

This limit is given by 2 revolutions/second for longer than 5 seconds.

Depending on the module, assemblies (e.g. the lamp in the detector) are turned off to assure that the module does not overheat inside.

Probable cause	Suggested actions
1 Fan cable disconnected.	Please contact your Agilent service representative.
2 Defective fan.	Please contact your Agilent service representative.
3 Defective main board.	Please contact your Agilent service representative.

Open Cover

Error ID: 0205

The top foam has been removed.

The sensor on the main board detects when the top foam is in place. If the foam is removed, the fan is switched off, and the error message is generated.

Probable cause	Suggested actions
1 The top foam was removed during operation.	Please contact your Agilent service representative.
2 Foam not activating the sensor.	Please contact your Agilent service representative.
3 Defective sensor or main board.	Please contact your Agilent service representative.
4 Rear of the module is exposed to strong direct sunlight.	Ensure that the rear of module is not directly exposed to strong sunlight.

Module Error Messages

Solvent Zero Counter

Error ID: 2055

The error message is triggered if the remaining volume in a solvent bottle falls below the set limit.

Probable cause	Suggested actions
1 Volume in bottle below specified volume.	Refill bottles and reset solvent counters.
2 Incorrect setting.	Make sure the set solvent volume matches the actual bottle filling and set the shutoff limit to a reasonable value (e.g. 100 mL for 1 L bottles)

Pressure Above Upper Limit

Error ID: 2014, 2500

The system pressure has exceeded the upper pressure limit.

Probable cause	Suggested actions
1 Upper pressure limit set too low.	Ensure the upper pressure limit is set to a value suitable for the analysis.
2 Blockage in the flowpath (after the damper).	Check for blockage in the flow path. The following components are particularly subject to blockage: inline filter frit, needle (autosampler), seat capillary (autosampler), sample loop (autosampler), column frits and capillaries with small internal diameters (e.g. 50 µm ID).
3 Defective damper.	Please contact your Agilent service representative.
4 Defective main board.	Please contact your Agilent service representative.

Pressure Below Lower Limit

Error ID: 2015, 2501

The system pressure has fallen below the lower pressure limit.

Probable cause	Suggested actions
1 Lower pressure limit set too high.	Ensure the lower pressure limit is set to a value suitable for the analysis.
2 Air bubbles in the mobile phase.	• Make sure that the degasser is in flow path and works correctly. Purge the module. • Ensure solvent inlet filters are not blocked.
3 Leak.	• Inspect the pump head, capillaries and fittings for signs of a leak. • Purge the module. Run a pressure test to determine whether the seals or other module components are defective.
4 Defective damper.	Please contact your Agilent service representative.
5 Defective main board.	Please contact your Agilent service representative.

Pressure Signal Missing

Error ID: 2016

The pressure signal of the damper is missing.

The pressure signal of the damper must be within a specific voltage range. If the pressure signal is missing, the processor detects a voltage of approximately -120 mV across the damper connector.

Probable cause	Suggested actions
1 Damper disconnected.	Please contact your Agilent service representative.
2 Defective damper.	Please contact your Agilent service representative.

Valve Failed

Error ID: 2040

Valve 0 Failed: valve A1

Valve 1 Failed: valve A2

Valve 2 Failed: valve B2

Valve 3 Failed: valve B1

One of the solvent selection valves in the module failed to switch correctly.

The processor monitors the valve voltage before and after each switching cycle. If the voltages are outside expected limits, the error message is generated.

Probable cause	Suggested actions
1 Solvent selection valve disconnected.	Please contact your Agilent service representative.
2 Connection cable (inside instrument) not connected.	Please contact your Agilent service representative.
3 Connection cable (inside instrument) defective.	Please contact your Agilent service representative.
4 Solvent selection valve defective.	Exchange the solvent selection valve.

Missing Pressure Reading

Error ID: 2054

The pressure readings read by the pump ADC (analog-digital converter) are missing.

The ADC reads the pressure signal of from the damper every 1ms. If the readings are missing for longer than 10 s, the error message is generated.

Probable cause	Suggested actions
1 Damper disconnected.	Please contact your Agilent service representative.
2 Defective damper.	Please contact your Agilent service representative.
3 Defective main board.	Please contact your Agilent service representative.

Wrong Pump Configuration

Error ID: 2060

At switch-on, the pump has recognized a new pump configuration.

The binary pump is assigned its configuration at the factory. If the active inlet valve and pump encoder of channel B are disconnected, and the binary pump is rebooted, the error message is generated.

Probable cause	Suggested actions
1 Active-inlet valve and pump encoder of channel B disconnected.	Please contact your Agilent service representative.

Electronic Fuse of SSV Open

Error ID: 2049

Valve Fuse 0: Channels A1 and A2

Valve Fuse 1: Channels B1 and B2

One of the solvent-selection valves in the module has drawn excessive current causing the selection-valve electronic fuse to open.

Probable cause	Suggested actions
1 Defective solvent selection valve.	Restart the pump. If the error message appears again, exchange the solvent selection valve.
2 Defective connection cable (front panel to main board).	Please contact your Agilent service representative.
3 Defective main board.	Please contact your Agilent service representative.

AIV Fuse

Error ID: 2044

Inlet-Valve Fuse 0: Pump channel A

Inlet-Valve Fuse 1: Pump channel B

One of the active-inlet valves in the module has drawn excessive current causing the inlet-valve electronic fuse to open.

Probable cause	Suggested actions
1 Defective active inlet valve.	Restart the module. If the error message appears again, exchange the active inlet valve.
2 Defective connection cable (front panel to main board).	Please contact your Agilent service representative.
3 Defective main board.	Please contact your Agilent service representative.

Temperature Out of Range

Error ID: 2517

Temperature Out of Range 0: Pump channel A

Temperature Out of Range 1: Pump channel B

One of the temperature sensor readings in the motor-drive circuit are out of range.

The values supplied to the ADC by the hybrid sensors must be between 0.5 V and 4.3 V. If the values are outside this range, the error message is generated.

Probable cause	Suggested actions
1 Defective main board.	Please contact your Agilent service representative.

Temperature Limit Exceeded

Error ID: 2517

Temperature Limit Exceeded 0: Pump channel A

Temperature Limit Exceeded 1: Pump channel B

The temperature of one of the motor-drive circuits is too high.

The processor continually monitors the temperature of the drive circuits on the main board. If excessive current is being drawn for long periods, the temperature of the circuits increases. If the temperature exceeds the upper limit, the error message is generated.

Probable cause	Suggested actions
1 High friction (partial mechanical blockage) in the pump drive assembly.	Remove the pump-head assembly. Ensure there is no mechanical blockage of the pump-head assembly or pump drive assembly.
2 Partial blockage of the flowpath in front of the damper.	Ensure the outlet valve is not blocked.
3 Defective pump drive assembly.	Please contact your Agilent service representative.
4 Defective main board.	Please contact your Agilent service representative.

Motor-Drive Power

Error ID: 2041, 2042

Motor-Drive Power: Pump channel A

B: Motor-Drive Power: Pump channel B

The current drawn by the pump motor exceeded the maximum limit.

Blockages in the flow path are usually detected by the pressure sensor in the damper, which result in the pump switching off when the upper pressure limit is exceeded. If a blockage occurs before the damper, the pressure increase cannot be detected by the pressure sensor and the module will continue to pump. As pressure increases, the pump drive draws more current. When the current reaches the maximum limit, the module is switched off, and the error message is generated.

Probable cause	Suggested actions
1 Flow path blockage in front of the damper.	Ensure the capillaries and frits between the pump head and damper inlet are free from blockage.
2 Blocked (passive or active) inlet valve.	Exchange the (passive or active) inlet valve.
3 Blocked outlet valve.	Exchange the outlet valve.
4 High friction (partial mechanical blockage) in the pump drive assembly.	Remove the pump-head assembly. Ensure there is no mechanical blockage of the pump-head assembly or pump drive assembly.
5 Defective pump drive assembly.	Please contact your Agilent service representative.
6 Defective main board.	Please contact your Agilent service representative.
7 Restriction capillary blocked at pre-mixing union.	Exchange restriction capillary.

Encoder Missing

Error ID: 2046, 2050, 2510

Encoder Missing: Pump channel A

B: Encoder Missing: Pump channel B

The optical encoder on the pump motor in the module is missing or defective.

The processor checks the presence of the pump encoder connector every 2 s. If the connector is not detected by the processor, the error message is generated.

Probable cause	Suggested actions
1 Defective or disconnected pump encoder connector.	Please contact your Agilent service representative.
2 Defective pump drive assembly.	Please contact your Agilent service representative.

Servo Restart Failed

Error ID: 2201, 2211

Servo Restart Failed: Pump channel A

B: Servo Restart Failed: Pump channel B

The pump motor in the module was unable to move into the correct position for restarting.

When the module is switched on, the first step is to switch on the C phase of the variable reluctance motor. The rotor should move to one of the C positions. The C position is required for the servo to be able to take control of the phase sequencing with the commutator. If the rotor is unable to move, or if the C position cannot be reached, the error message is generated.

Probable cause	Suggested actions
1 Mechanical blockage of the module.	Remove the pump-head assembly. Ensure there is no mechanical blockage of the pump-head assembly or pump drive assembly.
2 Disconnected or defective cable.	Please contact your Agilent service representative.
3 Blocked (passive or active) inlet valve.	Exchange the (passive or active) inlet valve.
4 Defective pump drive assembly.	Please contact your Agilent service representative.
5 Defective main board.	Please contact your Agilent service representative.

Pump Head Missing

Error ID: 2202, 2212

Pump Head Missing: Pump channel A

B: Pump Head Missing: Pump channel B

The pump-head end stop in the pump was not found.

When the pump restarts, the metering drive moves forward to the mechanical end stop. Normally, the end stop is reached within 20 s, indicated by an increase in motor current. If the end point is not found within 20 s, the error message is generated.

Probable cause	Suggested actions
1 Pump head not installed correctly (screws not secured, or pump head not seated correctly).	Install the pump head correctly. Ensure nothing (e.g. capillary) is trapped between the pump head and body.
2 Broken piston.	Exchange the piston.

Index Limit

Error ID: 2203, 2213

Index Limit: Pump channel A

B: Index Limit: Pump channel B

The time required by the piston to reach the encoder index position was too short (pump).

During initialization, the first piston is moved to the mechanical stop. After reaching the mechanical stop, the piston reverses direction until the encoder index position is reached. If the index position is reached too fast, the error message is generated.

Probable cause	Suggested actions
1 Irregular or sticking drive movement.	Remove the pump head, and examine the seals, pistons, and internal components for signs of wear, contamination or damage. Exchange components as required.
2 Defective pump drive assembly.	Please contact your Agilent service representative.

Index Adjustment

Error ID: 2204, 2214

Index Adjustment: Pump channel A

B: Index Adjustment: Pump channel B

The encoder index position in the module is out of adjustment.

During initialization, the first piston is moved to the mechanical stop. After reaching the mechanical stop, the piston reverses direction until the encoder index position is reached. If the time to reach the index position is too long, the error message is generated.

Probable cause	Suggested actions
1 Irregular or sticking drive movement.	Remove the pump head, and examine the seals, pistons, and internal components for signs of wear, contamination or damage. Exchange components as required.
2 Defective pump drive assembly.	Please contact your Agilent service representative.

Index Missing

Error ID: 2205, 2215, 2505

Index Missing: Pump channel A

B: Index Missing: Pump channel B

The encoder index position in the module was not found during initialization.

During initialization, the first piston is moved to the mechanical stop. After reaching the mechanical stop, the piston reverses direction until the encoder index position is reached. If the index position is not recognized within a defined time, the error message is generated.

Probable cause	Suggested actions
1 Disconnected or defective encoder cable.	Please contact your Agilent service representative.
2 Defective pump drive assembly.	Please contact your Agilent service representative.

Stroke Length

Error ID: 2206, 2216

Stroke Length: Pump channel A

B: Stroke Length: Pump channel B

The distance between the lower piston position and the upper mechanical stop is out of limits (pump).

During initialization, the module monitors the drive current. If the piston reaches the upper mechanical stop position before expected, the motor current increases as the module attempts to drive the piston beyond the mechanical stop. This current increase causes the error message to be generated.

Probable cause	Suggested actions
1 Defective pump drive assembly.	Please contact your Agilent service representative.

Initialization Failed

Error ID: 2207, 2217

Initialization Failed: Pump channel A

B: Initialization Failed: Pump channel B

The module failed to initialize successfully within the maximum time window.

A maximum time is assigned for the complete pump-initialization cycle. If the time is exceeded before initialization is complete, the error message is generated.

Probable cause	Suggested actions
1 Blocked (passive or active) inlet valve.	Exchange the (passive or active) inlet valve.
2 Defective pump drive assembly.	Please contact your Agilent service representative.
3 Defective main board.	Please contact your Agilent service representative.

7
Test Functions and Calibration

This chapter explains all test functions that are available for the binary pump.

Pump Leak Rate Test

Introduction

The **Pump Leak Rate Test** is used for verifying the internal tightness of the pump and helps identifying parts which may have caused a leak.

8 Maintenance

This chapter describes the maintenance and repair of the module.

Introduction to Maintenance

The pump is designed for easy maintenance. The most frequent maintenance procedures such as piston seal replacement and purge valve frit exchange can be done from the front side without removing the pump from the system stack.

Cautions and Warnings

WARNING

The module is partially energized when switched off, as long as the power cord is plugged in.

Repair work at the module can lead to personal injuries, e.g. electrical shock, when the cover is opened and the module is connected to power.

→ Always unplug the power cable before opening the cover.

→ Do not connect the power cable to the instrument while the covers are removed.

WARNING

Sharp metal edges

Sharp-edged parts of the equipment may cause injuries.

→ To prevent personal injury, be careful when getting in contact with sharp metal areas.

WARNING

Toxic, flammable and hazardous solvents, samples and reagents

The handling of solvents, samples and reagents can hold health and safety risks.

→ When working with these substances observe appropriate safety procedures (for example by wearing goggles, safety gloves and protective clothing) as described in the material handling and safety data sheet supplied by the vendor, and follow good laboratory practice.

→ The volume of substances should be reduced to the minimum required for the analysis.

→ Do not operate the instrument in an explosive atmosphere.

CAUTION

Electronic boards and components are sensitive to electrostatic discharge (ESD).

ESD can damage electronic boards and components.

→ Be sure to hold the board by the edges, and do not touch the electrical components. Always use ESD protection (for example, an ESD wrist strap) when handling electronic boards and components.

CAUTION

Safety standards for external equipment

→ If you connect external equipment to the instrument, make sure that you only use accessory units tested and approved according to the safety standards appropriate for the type of external equipment.

Cleaning the Module

To keep the module case clean, use a soft cloth slightly dampened with water, or a solution of water and mild detergent.

WARNING **Liquid dripping into the electronic compartment of your module can cause shock hazard and damage the module**

- Do not use an excessively damp cloth during cleaning.
- Drain all solvent lines before opening any connections in the flow path.

Overview of Maintenance and Simple Repairs

Figure 7 on page 96 shows the main user accessible assemblies of the binary pump. The pump heads and its parts require normal maintenance (for example, seal exchange) and can be accessed from the front (simple repairs). Replacement of valve or filters don't require to remove the pump from the system stack.

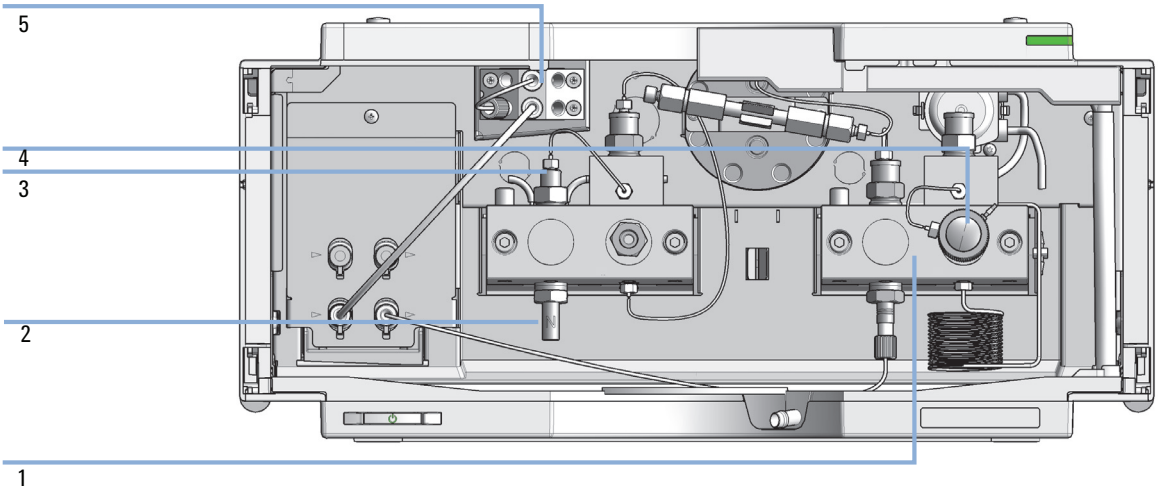

Figure 7 Overview of Maintenance and Simple Repairs

1	Pump head, see "Remove the Pump Head Assembly" on page 105
2	Inlet valve
3	Outlet valve, see "Exchange the Outlet Valve" on page 120
4	Purge valve, see "Exchange the Purge Valve Frit or the Purge Valve" on page 100
5	Solvent selection valve, see "Exchange the Solvent Selection Valve" on page 122

Maintenance Procedures

The procedures described in this section can be done with the binary pump in place in the system stack.

Table 9 Maintenance procedures

Procedure	Typical Frequency	Notes
"Exchange the Purge Valve Frit or the Purge Valve" on page 100	Yearly, or if the frit shows indication of contamination or blockage If internally leaking	A pressure drop of > 10 bar in low delay volume configuration and > 20 bar in standard configuration across the frit (5 mL/min H_2O with purge valve open) indicates blockage Solvent dripping out of waste outlet when valve is closed
"Remove the Pump Head Assembly" on page 105	During yearly maintenance	Necessary to get access to pump seals and pistons
"Maintenance of a Pump Head without Seal Wash" on page 107	Yearly, or if pump performance indicates seal wear	Leaks at lower pump head side, unstable retention times, pressure ripple unstable — run **Valve Test** for verification Seal life time shorter than normally expected — check pistons while changing the seals
"Maintenance of a Pump Head with Seal Wash" on page 110	Yearly, or if pump performance indicates seal wear	Only necessary when Seal Wash Option is installed. Leaks at lower pump head side, loss of wash solvent
"Exchange the Outlet Valve" on page 120	If internally leaking	Pressure ripple unstable, run **Valve Test** for verification
"Exchange the Solvent Selection Valve" on page 122	If internally leaking If solenoid is defective	Cross port flow Error message "Valve Failed"

Remove and Install Doors

Parts required	p/n	Description
	5067-5746	Door Assembly Infinity 180 Right
	5067-5745	Door Assembly Infinity 180 Left

NOTE

The figures shown in this procedure exemplarily show the Infinity II Multisampler module.

The principle of how to remove and/or install doors works in the same way for all Infinity II modules.

1 Press the release buttons and pull the front door out.

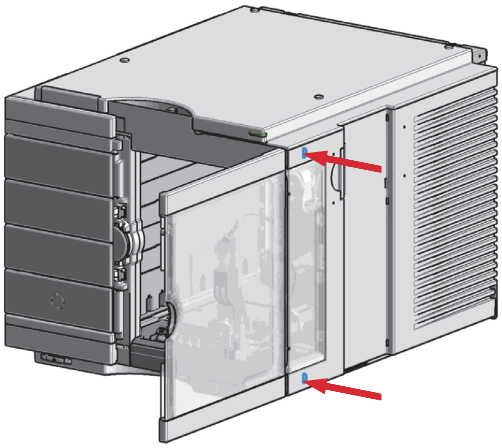

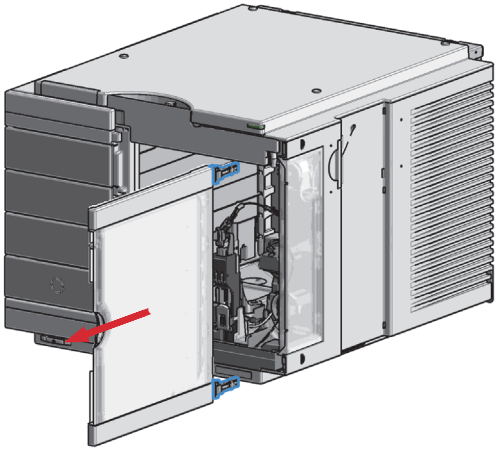

2 For the Installation of the front door. Insert the hinges into their guides and move the door in until the release buttons click into their final position.

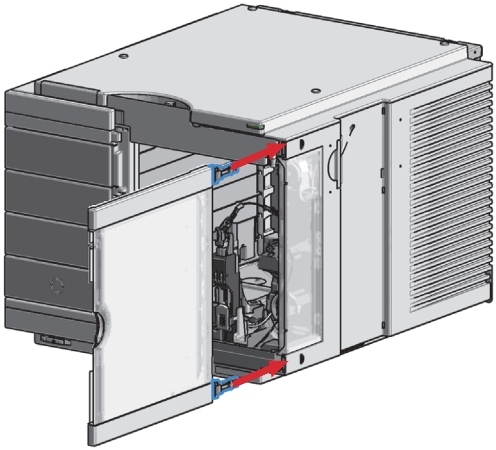

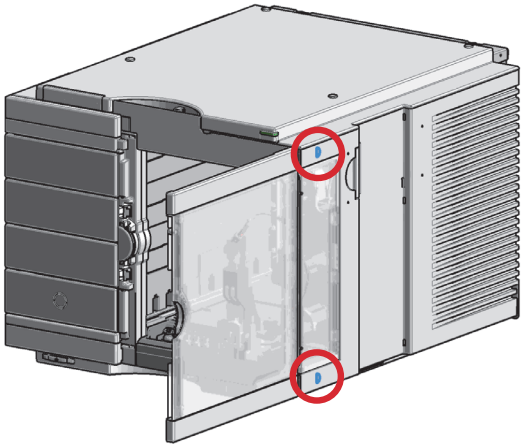

Exchange the Purge Valve Frit or the Purge Valve

When

- Frit – when piston seals are exchanged or when contaminated or blocked (pressure drop of > 10 bar in low delay volume configuration and > 20 bar in standard configuration across the frit at a flow rate of 5 mL/min of water with purge valve opened)
- Purge valve – if internally leaking

Tools required

p/n	Description
8710-0510	Wrench open 1/4 — 5/16 inch
8710-1924	Wrench open 14 mm
	Pair of tweezers
OR	Toothpick

Parts required

p/n	Description
	Frits
	Purge Valve
5067-4728	Seal cap

Preparations

- Switch off pump at the main power switch
- Open the doors
- Use an optional solvent shutoff valve or lift up solvent filters in solvent reservoirs for avoiding leakages

1 Using a 1/4 inch wrench disconnect the pump outlet capillary from the purge valve. Disconnect the waste tube. Beware of leaking solvents due to hydrostatic pressure.

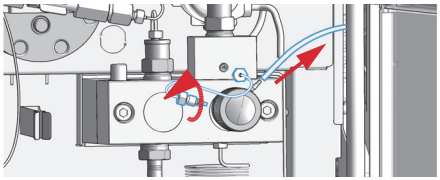

2 Using the 14 mm wrench, unscrew the purge valve and remove it from the purge valve holder.

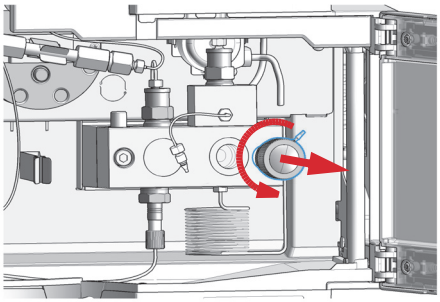

3 Remove the seal cap from the purge valve. Using a pair of tweezers or a toothpick, remove the frit. 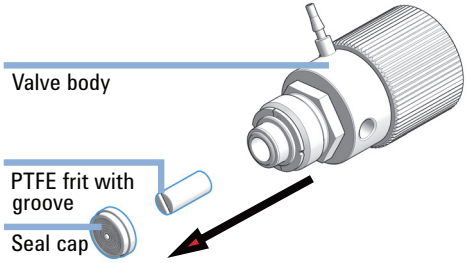 	**4** Place a new frit into the purge valve with the orientation of the frit as shown below (slit in frit points to the front). Reinstall the seal cap including the gold seal. 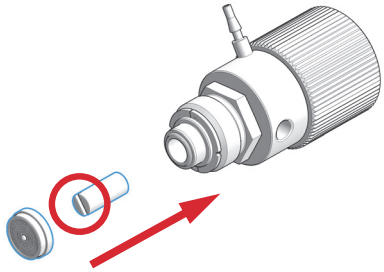
5 Insert the purge valve into the purge valve holder. 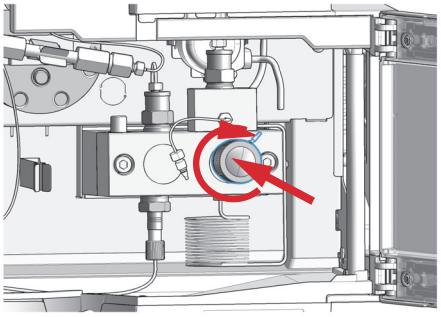	**6** Tighten the purge valve and reconnect outlet capillary and waste tubing. 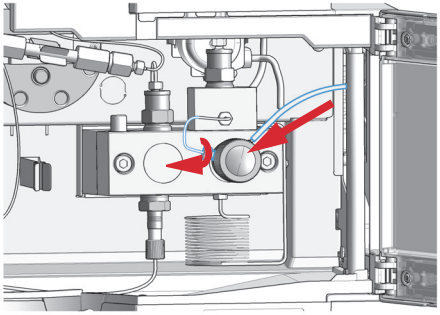

Replace the O-Ring on the Purge Valve

When If the original o-ring is damaged and needs to be replaced

Tools required

p/n	Description
8710-0510	Wrench open 1/4 — 5/16 inch
8710-1924	Wrench open 14 mm
	Pair of tweezers
OR	Toothpick

Parts required

#	p/n	Description
1	5067-6595	1260 PV O-ring FKM 5/pack
1	01018-22707	PTFE frits (pack of 5) (OPTIONAL)
1	5067-4728	Seal cap (OPTIONAL)

Preparations

- Switch off pump at the main power switch.
- Open the doors of the module.
- Use an optional solvent shutoff valve or lift up solvent filters in solvent reservoirs for avoiding leakages.
- Remove the purge valve from the pump head.

1 Disassemble the purge valve.

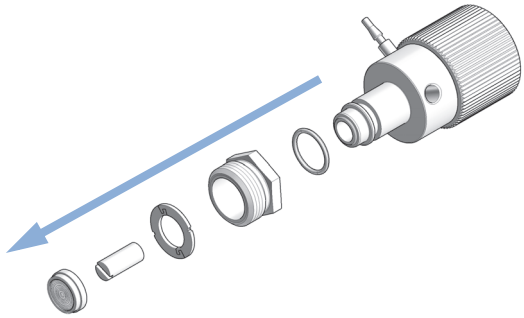

2 Remove the old o-ring from the purge valve.

3 Clean the purge valve parts.

4 Place the new o-ring on the Screw Purge Valve. 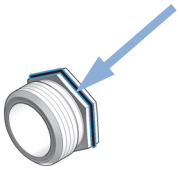	**5** Place the screw with o-ring on the Purge Valve Body. 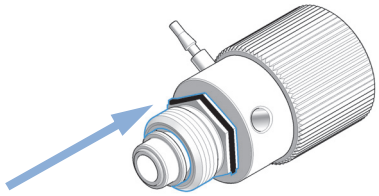
6 Place the mounting ring on the screw and push down the o-ring. 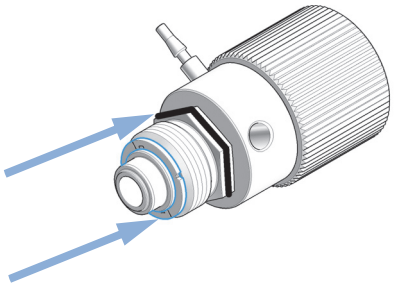	**7** Place a new frit into the purge valve with the orientation of the frit as shown below (slit in frit points to the front). Reinstall the seal cap including the gold seal. 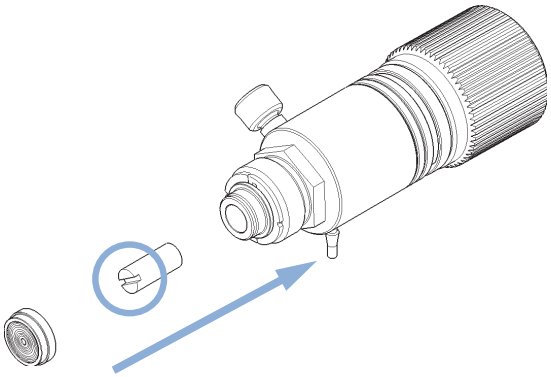 **NOTE** Before reinstallation always check the gold seal in the seal cap. A deformed seal cap should be exchanged.

8 Push the screw up and guide the o-ring into the gap. 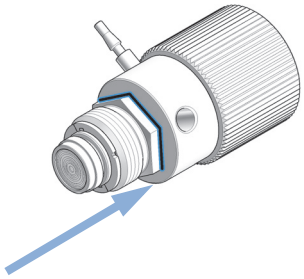	**9** Install the purge valve to the pump, make sure that you do not turn the Purge Valve Body when the screw is fixed to the pump. The o-ring will take damage.

Remove the Pump Head Assembly

When

- Exchanging pump seals
- Exchanging pistons
- Exchanging seals of the seal wash option

Tools required

p/n	Description
8710-0510	Wrench open 1/4 — 5/16 inch
8710-2411	Hex key 3 mm12 cm long
8710-2392	Hex key 4 mm15 cm long T-handle
5023-0240	Hex driver, ¼", slitted

Preparations

Switch off the pump at the main power switch.

CAUTION

Damage of the pump drive

Starting the pump when the pump head is removed may damage the pump drive.

➔ Never start the pump when the pump head is removed.

NOTE

Both pump head assemblies use the same internal components. In addition, pump head A is fitted with the purge valve. The following procedure describes the removal and disassembly of pump head A (left). For pump head B (right) proceed in the same way and skip steps that deal with the purge valve.

1 Open the doors. 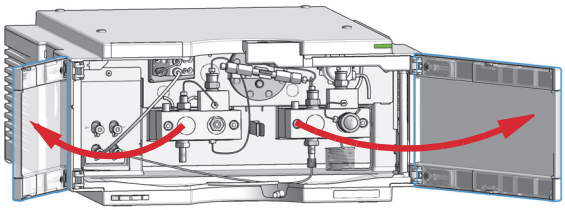	**2** Disconnect the capillaries. Beware of leaking solvents. 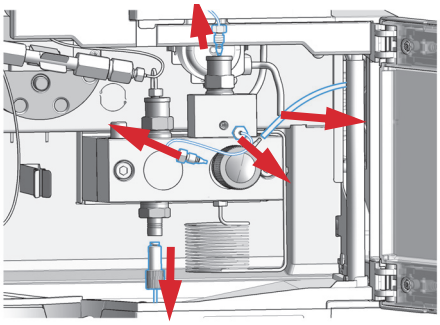
3 Using a 4 mm hexagonal key stepwise loosen and remove the two pump head screws. 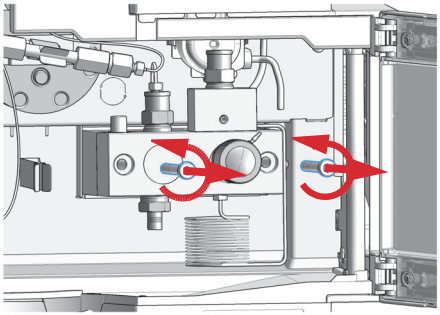	**4** Remove the pump head assembly from the module. 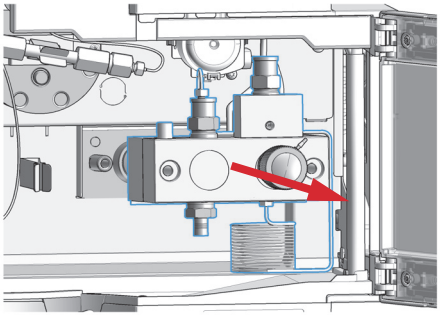

Maintenance of a Pump Head without Seal Wash

When

In case of maintenance or pump head internal leaks

Tools required

p/n	Description
8710-0510	Wrench open 1/4 — 5/16 inch
8710-2411	Hex key 3 mm12 cm long
8710-2392	Hex key 4 mm15 cm long T-handle
01018-23702	Insert tool

Parts required

	#	p/n	Description
	1	5063-6589	Piston seal PTFE, carbon filled, black (pack of 2), default
OR	1	0905-1420	PE seals (pack of 2)
	1	5067-4695	Sapphire piston

Preparations

- Switch off the pump at the main power switch.
- Open the doors of the module.
- Use an optional solvent shutoff valve or lift up solvent filters for avoiding leakages.
- Remove the Pump Head Assembly.

NOTE

Both pump head assemblies use the same internal components. In addition, pump head A is fitted with the purge valve. The following procedure describes the removal and disassembly of pump head A (left). For pump head B (right) proceed in the same way and skip steps that deal with the purge valve.

1 Place the pump head on a flat surface. Loosen the lock screw (two turns). 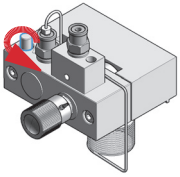	**2** While holding the lower half of the assembly (piston housing), carefully pull the pump housing away from the piston housing. 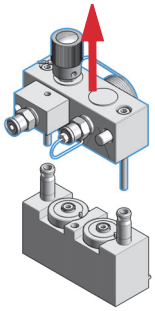
3 Remove the support rings from the piston housing. 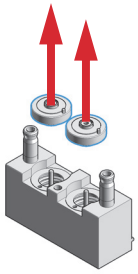	**4** Lift the housing away from the pistons. 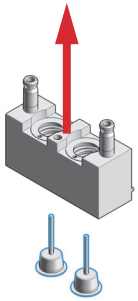
5 Check the piston surface and remove any deposits or layers: clean the piston surface with abrasive paper and rinse with 2-propanol. Replace piston if scratched. 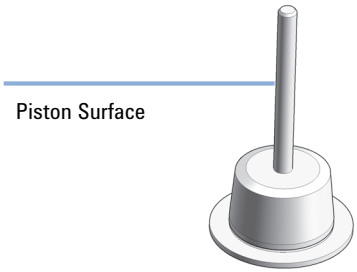	**6** Using the steel side of the insert tool, carefully remove the seal from the pump housing. 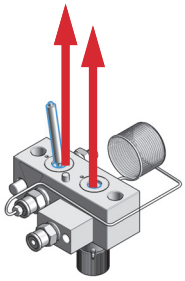

7 Using the plastic side of the insert tool, insert new seals into the pump head. 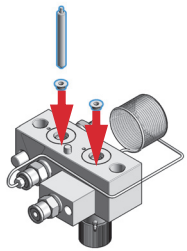	**8** Place the support rings on the piston housing. Note the correct position of the pins on the support ring. 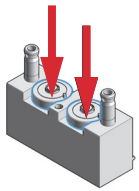
9 Place the pump housing onto the piston housing. 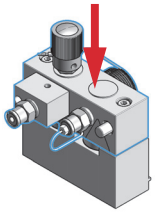	**10** Insert the pistons and carefully press them into the seals. 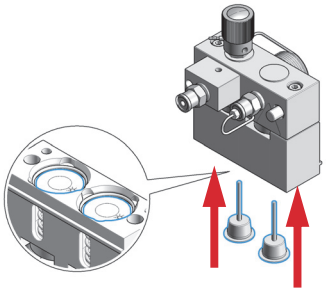
11 Tighten the lock screw. 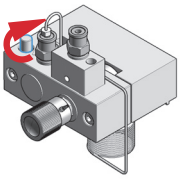	**12** Install the pump head, see .

Maintenance of a Pump Head with Seal Wash

When

In case of maintenance or pump head internal leaks

Tools required

p/n	Description
8710-2411	Hex key 3 mm12 cm long
8710-2392	Hex key 4 mm15 cm long T-handle
01018-23702	Insert tool
	Screwdriver, small flat head

Parts required

p/n	Description
0905-1718	Wash seal (PTFE)
5062-2484	Gasket, seal wash (pack of 6)
5067-4695	Sapphire piston
0905-1719	PE Seal

Preparations

- Switch off the pump at the main power switch.
- Open the doors of the module.
- Use an optional solvent shutoff valve or lift up solvent filters for avoiding leakages.
- Remove the Pump Head Assembly.
- Remove the wash solvent tubings from the support ring inlet and outlet.

1 Place the pump head on a flat surface. Loosen the lock screw (two turns). 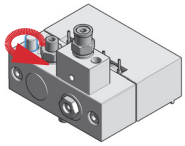	**2** While holding the lower half of the assembly (piston housing), carefully pull the pump housing away from the piston housing. 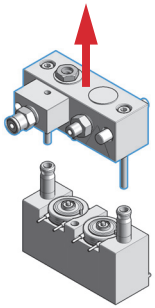

3 Remove the seal holder and the seal wash support rings from the piston housing. 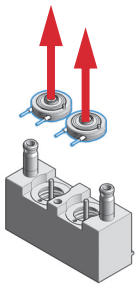	**4** Remove the seal holder from the support ring assembly. 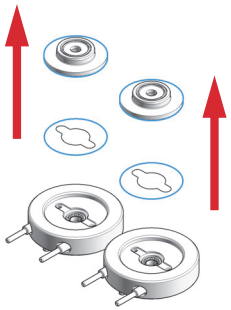
5 Lift the housing away from the pistons. 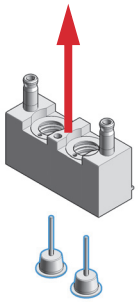	**6** Check the piston surface and remove any deposits or layers: clean the piston surface with abrasive paper and rinse with 2-propanol. Replace piston if scratched. 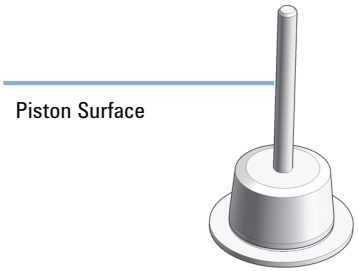
7 Using the steel side of the insert tool, carefully remove the seal from the pump housing. 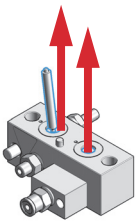	**8** Using the plastic side of the insert tool, insert new seals into the pump head. 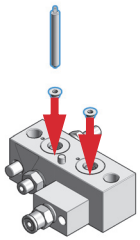

9 Using the steel side of the insert tool, remove the seal wash gasket and the wash seal from the support ring. 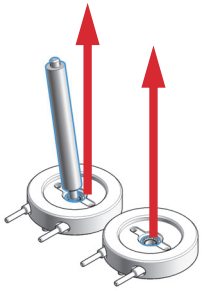	**10** Using the plastic side of the insert tool, press the new wash seal (spring pointing upwards) into the recess of the support ring. 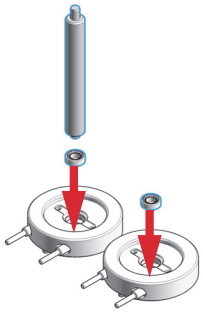
11 Place a seal wash gasket in the recess of the support ring. Use a matching orientation of gasket and support ring. Put the seal holder on top of the gasket. 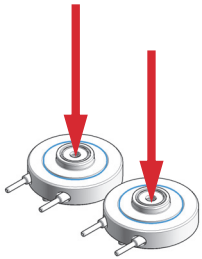	**12** Place the support rings on the piston housing. Note the correct position of the pins on the support ring. 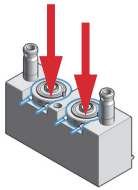
13 Place the pump housing onto the piston housing. 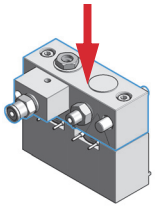	**14** Insert the pistons and carefully press them into the seals. 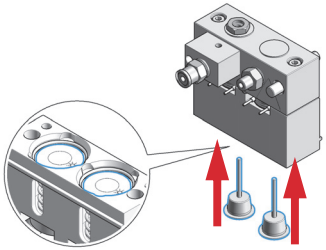

15 Tighten the lock screw. 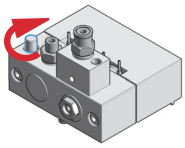	**16** Install the pump head, see .

Reinstall the Pump Head Assembly

When When reassembling the pump

Tools required
- 3-mm hexagonal key
- 4-mm hexagonal key

1 Slide the pump head assembly onto the pump drive.

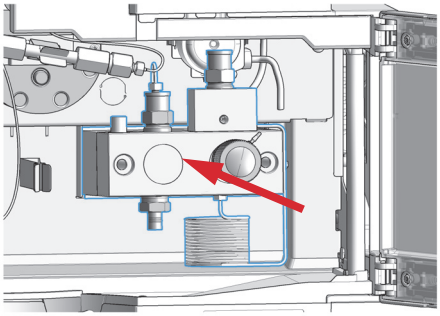

2 Using a 4 mm hexagonal key, tighten the pump head screws stepwise with increasing torque.

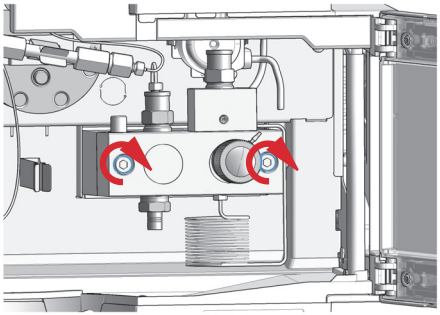

3 Reconnect all tubings and capillaries.

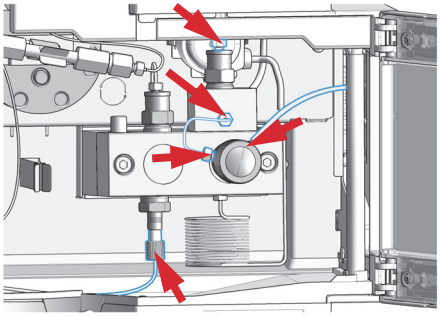

4 Close the doors.

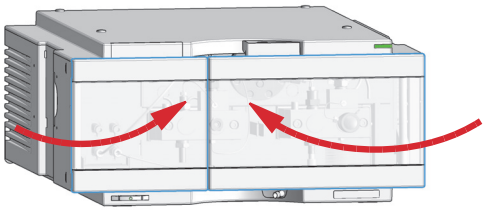

Seal Wear-in Procedure Channel B

1. Put a bottle with 100 ml of isopropanol in the solvent cabinet and place the solvent intake filter of the pump head you want to wear in into this bottle.
2. Screw the PEEK adapter 1/4-28 to 10-32 (0100-1847) onto the active inlet valve and connect the inlet tube from the bottle head directly to it.
3. Connect the Restriction capillary (5022-2159) to the purge valve. Connect its other end to a waste container.
4. Open the purge valve and purge the system for 5 min with isopropanol at a flow rate of 2 mL/min.
5. Close the purge valve, set the flow to a value that gives a pressure of 350 bar. Pump 15 min at this pressure to wear the seals in. The pressure can be monitored on the analog output connector of the pump, with the Instant Pilot, chromatographic data system or any other controlling device connected to your pump.
6. Turn OFF the pump, slowly open the purge valve to release the pressure from the system, disconnect the restriction capillary and reconnect the outlet capillary to the purge valve. Reconnect the intake tubing to the solvent selection valve and the connecting tube from the solvent selection valve (if installed) to the AIV.
7. Purge your system with the solvent used for your next application.

Exchange the Seal Wash Cartridge

Parts required	p/n	Description
	5065-4445	Peristaltic pump with Pharmed tubing

Preparations

- Switch off pump at the main power switch.
- Open the doors.

1 Remove the wash solvent tubings from the support ring outlet and from the adapter leading to the waste bottle. 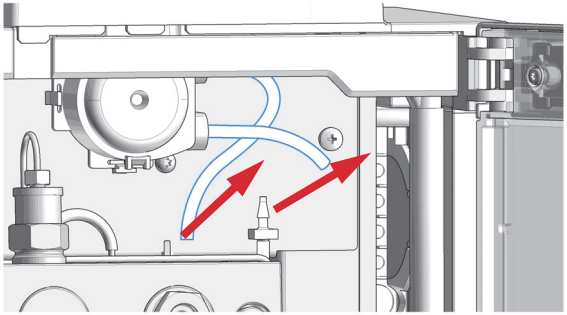	**2** Unclip the peristaltic pump cartridge from the module housing and remove it. 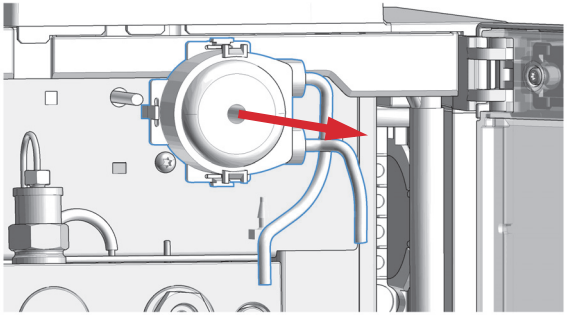

3 Put the new peristaltic pump cartridge onto the rod of the pump motor and push the plastic clips into the module housing. 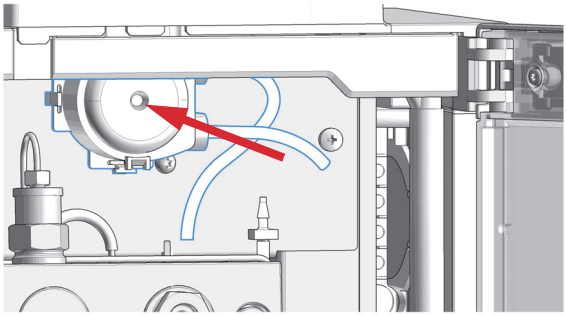 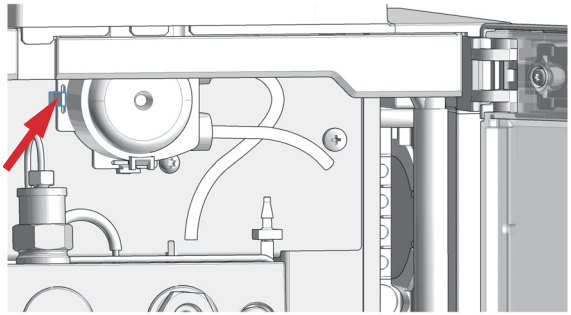	**4** Connect the peristaltic pump tubes to the support rings outlet and to the adapter leading to the waste bottle. 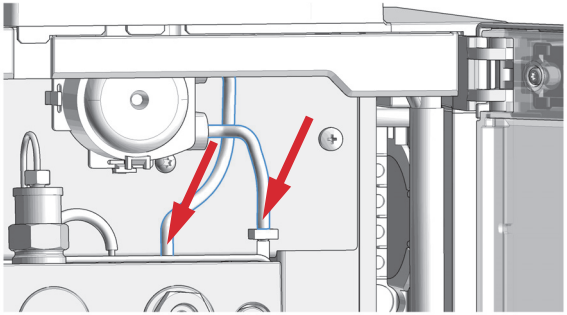

Replace Leak Handling System Parts

Parts required	p/n	Description
	5063-6527	Tubing assembly, i.d. 6 mm, o.d. 9 mm, 1.2 m (to waste) approximately 85 mm required

1 Open the doors. 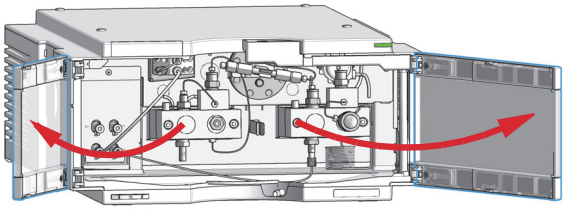	**2** Press the Leak Adapter down and remove it together with the tubing. **3** Install the Leak Adapter by pressing it into the Main Cover. **4** Insert the Tubing (approximately 85 mm required for replacement) between Leak Adapter outlet and Leak Panel.
5 Close the doors. 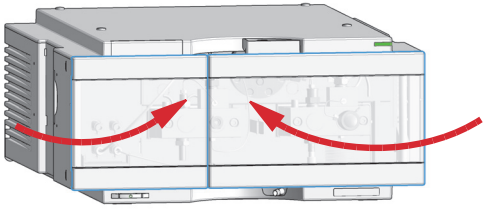	

Exchange the Inlet Valve

When	If internally leaking (backflow)	
Tools required	**Description**	
	Wrench, 14 mm	
Parts required	**p/n**	**Description**
	G1312-60066	Passive inlet valve
	G4302-60066	Inlet Valve SFC
Preparations	Switch off the pump at the main power switch	

1 Disconnect the solvent inlet tube at the inlet valve (beware of leaking solvents).

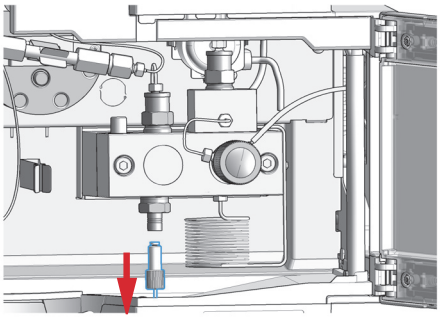

2 Using a 14 mm wrench, loosen the active inlet valve and remove the valve from the pump head.

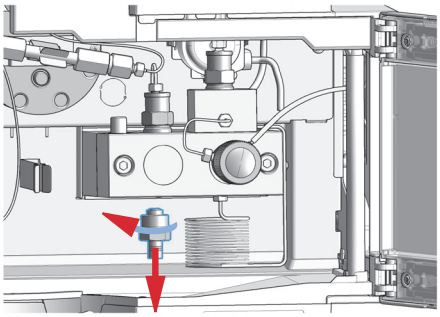

3 Screw the new valve into the pump head and tighten using the 14 mm wrench. Do not overtighten.

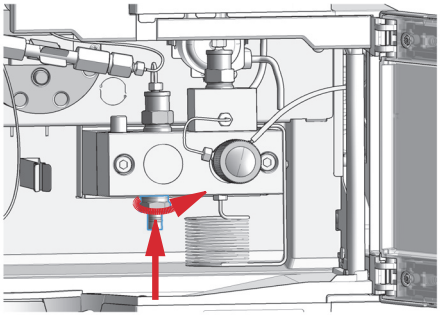

4 Reconnect the inlet tube to the valve.

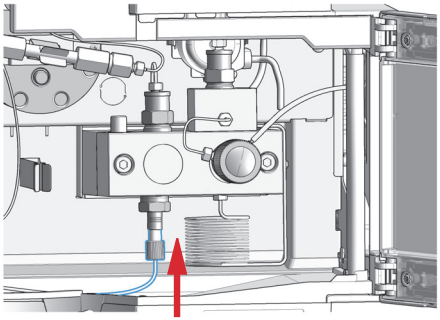

Exchange the Outlet Valve

When	if leaking internally
Tools required	**Description** Wrench, 1/4 - 1/5 inch Wrench 1/4 inch Wrench, 14 mm

Parts required

#	p/n	Description
1	G1312-60167	Outlet valve Channel A
2	G1312-60067	Outlet valve Channel B

Preparations Switch off the pump at the main power switch

1 Using a ¼ inch wrench disconnect the absorber capillary from the outlet valve.

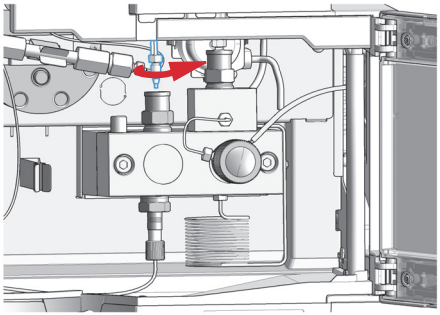

2 Unscrew the valve with the 14 mm wrench and remove it from the pump body.

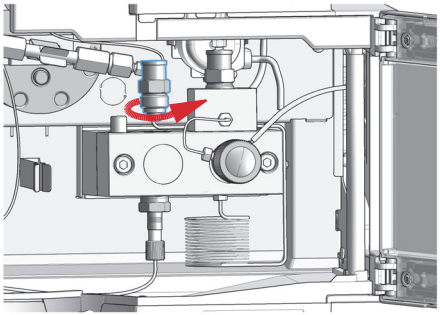

NOTE

Do not disassemble the outlet valve, as this can damage the valve.

3 Reinstall the outlet valve and tighten it using a torque wrench (approx.12 Nm). 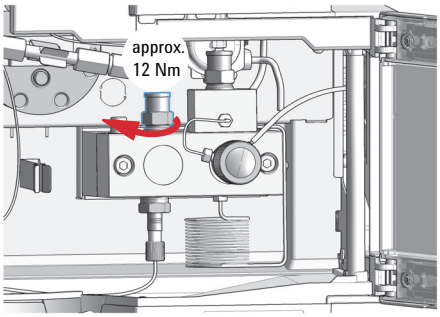 	**4** Reconnect the capillary. 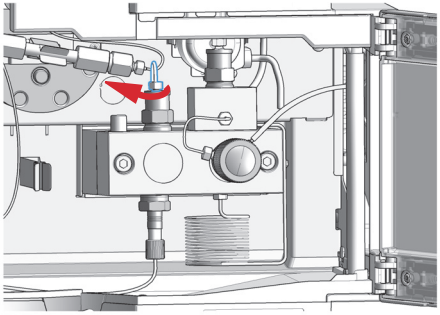

Exchange the Solvent Selection Valve

When	If leaking internally (crossflow between the ports), or if one of the channels is blocked	
Tools required	**p/n**	**Description**
	8710-0899	Screwdriver, Pozidriv #1
Parts required	**p/n**	**Description**
	G1381-60000	Solvent Selection Valve Upgrade Kit
Preparations	Switch off the pump at the main power switch	

1 Lift solvent bottles out of the solvent cabinet and place them on the table. Disconnect the solvent tubes from the solvent selection valve and empty the tubes into the bottles. Place the bottles back into the solvent cabinet.

2 Disconnect all tubings from the solvent selection valve.

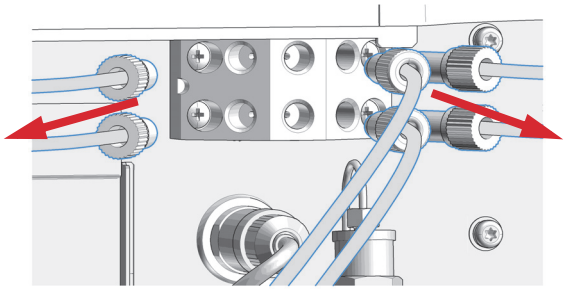

3 Using a Pozidriv screwdriver #1 loosen the holding screws of the valve holder.

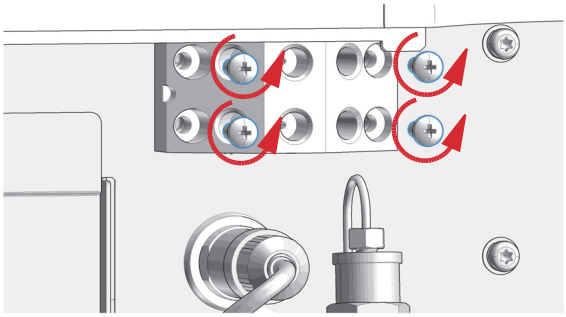

4 Carefully pull the valve holder out and disconnect the valve cable at the connector.

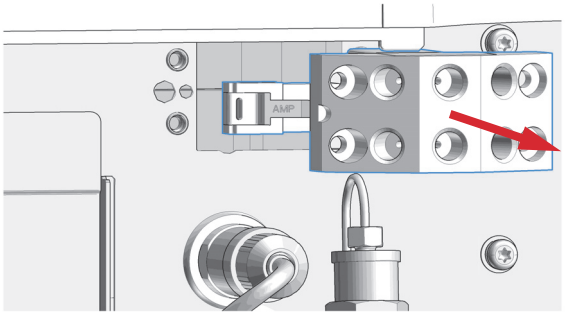

5 Exchange the defective solvent selection valve. 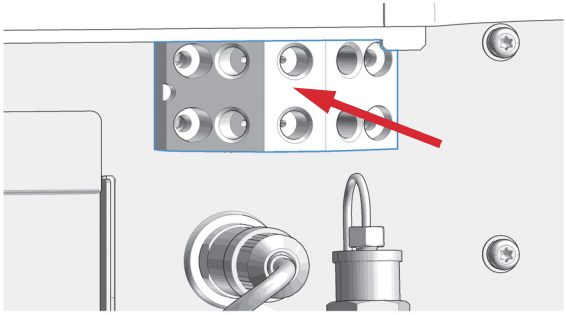	**6** Tighten the screws of the valve holder. 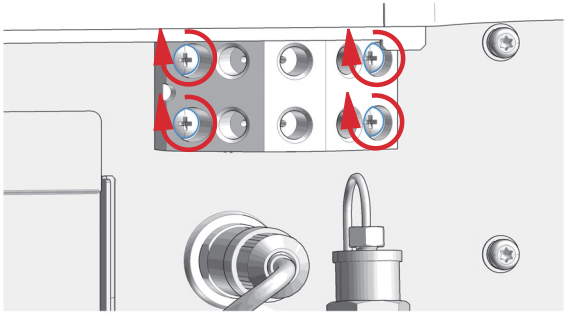
7 Reconnect all tubings to the solvent selection valve. 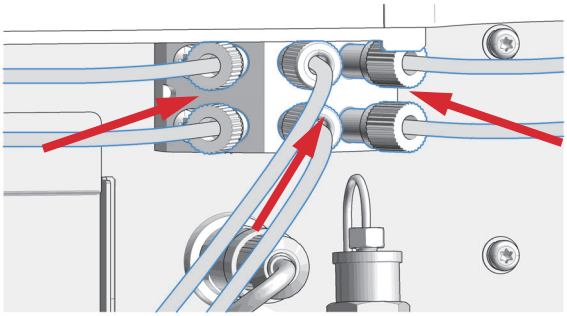	

NOTE After an exchange of the valve it may be required to pump several mL of solvent before the flow stabilizes at a pressure ripple as low as it used to be when the system was still working properly.

Replacing Module Firmware

When

The installation of newer firmware might be necessary
- if a newer version solves problems of older versions or
- to keep all systems on the same (validated) revision.

The installation of older firmware might be necessary
- to keep all systems on the same (validated) revision or
- if a new module with newer firmware is added to a system or
- if third party control software requires a special version.

Tools required

	Description
	Agilent Lab Advisor software
OR	Instant Pilot G4208A (only if supported by module)

Parts required

#	Description
1	Firmware, tools and documentation from Agilent web site

Preparations

Read update documentation provided with the Firmware Update Tool.

To upgrade/downgrade the module's firmware carry out the following steps:

1 Download the required module firmware, the latest FW Update Tool and the documentation from the Agilent web.
http://www.agilent.com/en-us/firmwareDownload?whid=69761

2 For loading the firmware into the module follow the instructions in the documentation.

Module Specific Information

There is no specific information for this module.

9
Parts and Materials for Maintenance

This chapter lists all parts and tools that are required for maintenance and simple repairs.

Hydraulic Path with Solvent Selection Valve

Item	#	p/n	Description
1	1	5067-4697	Solvent selection valve bridge tubing
2	1	5067-5895	Solvent selection valve
	1	5041-8365	Blank plug for unused SSV channels
3	2	G7111-60100	Solvent Tubes including labels Solvent selection valve to degasser
4	1	G7112-60070	Degasser Unit 2 Channels
5	1	G7112-67300	Connecting Tube Degasser to Channel B
6	1	G1312-87305	Capillary SSL, 0.17 x 150 mm (pressure sensor to damper)
7, 13	1	G1316-87300	Capillary ST 0.17 mm x 90 mm S/S
8	1	G1312-87300	Absorber capillary
9	1	G7111-60061	Purge valve
10	1	5064-5444	Peristaltic pump cartridge, silicone tubing
11	1	G1312-87306	Capillary SSL, 0.17 x 105 mm (connections to solvent mixer)
	1	G1312-04100	Bracket for solvent mixer
12	1	G1312-87330	Mixer
	1	5500-1246	Capillary ST 0.17 mm x 500 mm SI/SI
	1	5500-1217	Capillary ST 0.17 mm x 900 mm SI/SX ps-ps
	1	5065-9978	Tubing, 1 mm i.d., 3 mm o.d., silicone, 5 m for seal wash option
	1	5062-2461	Waste tube, 5 m (reorder pack)
	1	G4301-60560	Cross and Cap. Kit for Aux Pres.Sensor

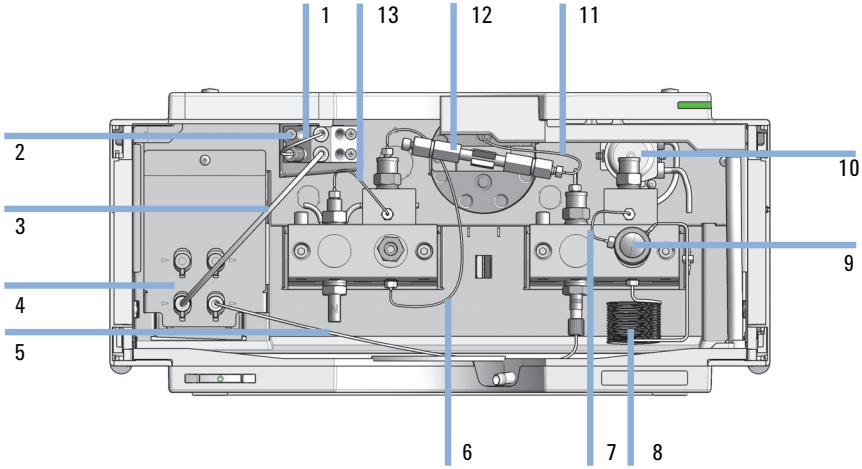

Figure 8 Hydraulic Path with Solvent Selection Valve

Pump Head Assembly Channel B

Item	#	p/n	Description
1	1	5067-4695	Sapphire piston
2	1	G1312-60062	Adapter, integrated, 1260
3, 4	1	G4220-60015	Support ring including backup ring
5	1	0905-1503	Pump seals, PTFE (PumpHead B)
6	1	G1312-25260	Pump housing
7	1	G1312-60066	Passive inlet valve
8	1	G7111-60061	Purge valve
9	1	0515-2118	Pump head screw (M5, 60 mm)
10	1	5042-1303	Lock screw
11	1	G4302-20000	Adapter OV SFC
	1	0515-0175	Mounting screw for manual purge valve holder, M4, 20 mm long
12	2	G1312-60067	Outlet valve Channel B
13	1	G1312-87300	Absorber capillary

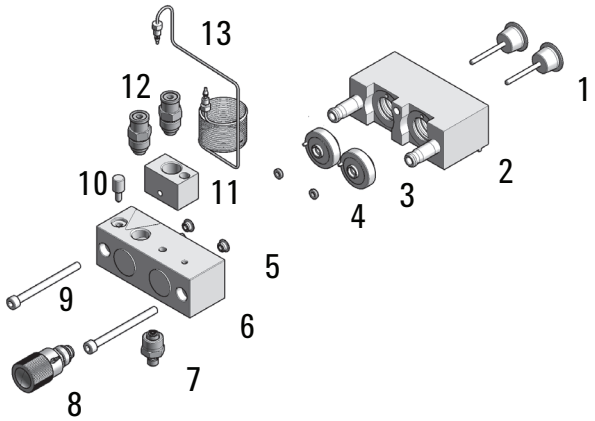

Figure 9 Pump Head Assembly Without Seal Wash

Pump Head Assembly Channel A

Item	p/n	Description
1	5067-4695	Sapphire piston
2	G1312-60062	Adapter, integrated, 1260
3	G4220-63010	Support Ring (Seal Wash)
4	0905-1718	Wash Seal PE
5	5062-2484	Gasket, seal wash (pack of 6)
6	G4220-60016	Seal holder including backup ring
7	0905-1719	PE Seal
8	G1312-25260	Pump housing
9	G4302-60066	Inlet Valve SFC
10	0515-2118	Pump head screw (M5, 60 mm)
11	G1312-60001	Adapter
12	5042-1303	Lock screw
13	G4280-60026	High Pressure Filter
14	G4302-20000	Adapter OV SFC
	0515-0175	Mounting screw for manual purge valve holder, M4, 20 mm long
15	G1312-60167	Outlet valve Channel A
	5065-9978	Tubing, 1 mm i.d., 3 mm o.d., silicone, 5 m
	G1316-87300	Capillary ST 0.17 mm x 90 mm S/S
	G1313-87305	Capillary 0.17 x 180 mm

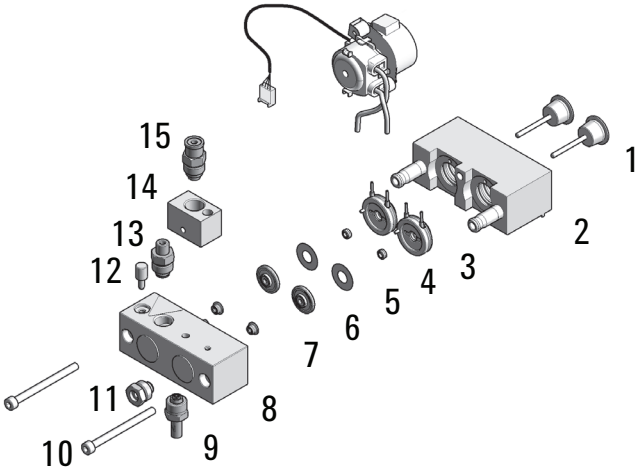

Figure 10 Pump Head Assembly with Seal Wash Option

Outlet Valve

p/n	Description
G1312-60067	Outlet valve 1220/1260
G1312-60167	1260 Infinity Outlet Valve Type N/SFC

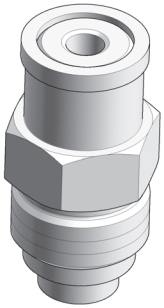

Figure 11 Outlet valve

Purge Valve Assembly

Item	p/n	Description
1	G7111-60061	Purge valve
2	01018-22707	PTFE frits (pack of 5)
3	5067-4728	Seal cap
	5067-6595	1260 PV O-ring FKM 5/pack

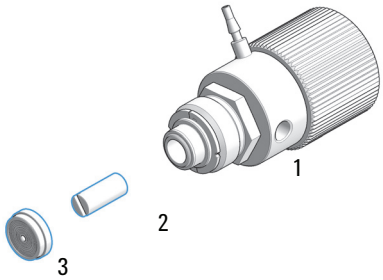

HPLC System Tool Kit

HPLC System Tool Kit-Infinity-II (G7120-68708) contains the following items:

p/n	Description
9301-0411	Syringe; Plastic
9301-1337	Syringe adapter
0100-1710	Mounting Tool for Tubing Connections
8710-0510	Wrench open 1/4 — 5/16 inch
8710-1924	Wrench open 14 mm
01018-23702	Insert tool
0100-1681	Syringe adapter luer/barb
8710-2394	Hex key 9/64 inch 15 cm long T-handle
8710-1534	Wrench, 4 mm both ends, open end
8710-2409	Wrench open end, 5/16 – 3/8 inch
8710-0899	Pozidriv screwdriver
5023-2500	Spanner double open ended SW-5
5023-2504	Hex driver SW-4 slitted
5023-2503	Hex driver SW-5 slitted
5023-2502	Hex driver SW-6.35, slitted
5023-2501	Screwdriver Torx-T10
8720-0025	Wrench, 1/2 inch & 9/16 inch

p/n	Description
5023-2524	Hex Key Set + Driver

p/n	Description
01080-83202	Blank nut

Active Seal Wash Option

The Active Seal Wash Option kit (G1399-60001) contains the following parts:

#	p/n	Description
1	5062-2484	Gasket, seal wash (pack of 6)
1	01018-23702	Insert tool
4	01018-60027	Support ring seal wash
2	0515-1508	Screws for Seal Wash Pump Motor
1	5065-9978	Tubing, 1 mm i.d., 3 mm o.d., silicone, 5 m
4	0905-1175	Wash seal (PTFE)
1	5063-6589	Piston seal PTFE, carbon filled, black (pack of 2), default
1	1460-2763	Compression Spring SST
2	1520-0260	Shock mount
1	1540-0455	Edge protector
1	5041-2120	Folding box
1	5065-4445	Peristaltic pump with Pharmed tubing
1	5042-6422	Tubing connector, 1 mm o.d.
1	5065-9943	Stepper Motor for the Peristaltic Pump
1	G3010-01203	RFI Strip 10×30

Solvent Cabinet

p/n	Description
5067-5760	Solvent Cabinet Kit

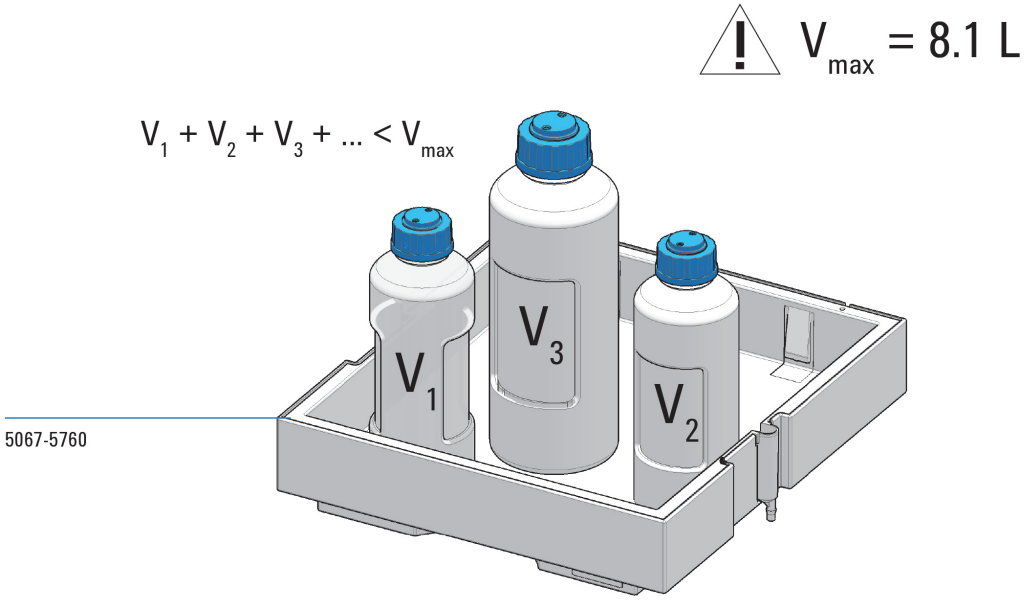

For details refer to: Usage Guideline for the Solvent Cabinet (01200-90150)

Bottle Head Assembly

p/n	Description
G7120-60007	Bottle Head Assembly
5063-6598	Ferrules with lock ring (10/Pk)
5063-6599	Tube screw (10/Pk)
	Wire marker
5062-2483	Tube PTFE 1.5 mm x 5 m, 3 mm od
5062-8517	Inlet filter adapter (4/Pk)
5041-2168	Solvent inlet filter, 20 µm pore size

Cover Parts

Item	p/n	Description
1	5067-5746	Door Assembly Infinity 180 Right
2	5067-5745	Door Assembly Infinity 180 Left
3	5043-1354	Name Plate 1290 Infinity 2
4	G7104-68713	Cabinet Kit 180 Infinity II (includes sides, bottom, top, leak adapter top and Status Indicator Insert)

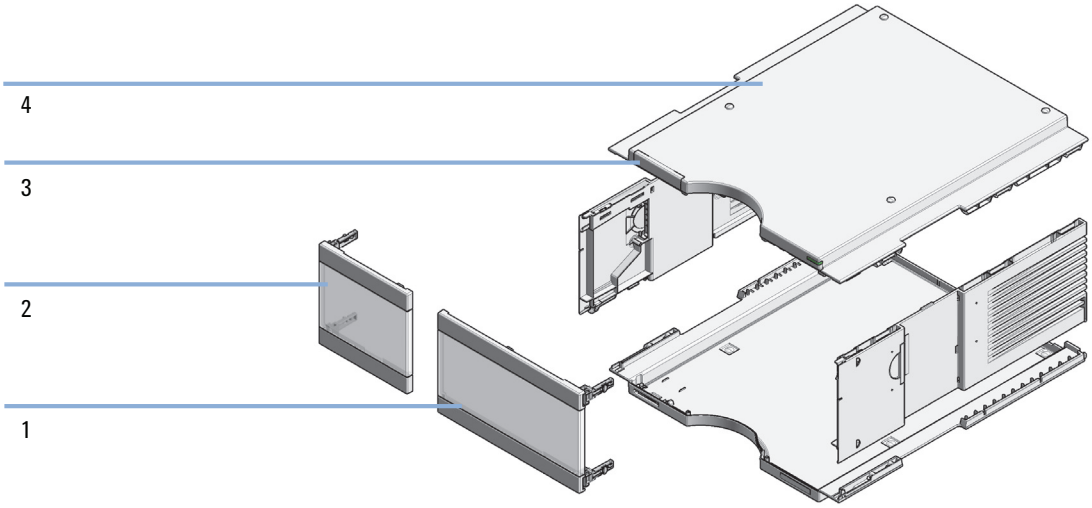

Figure 12 Cover Parts

Accessory Kit

The Accessory Kit (G7111-68755) contains the following items:

#	p/n	Description
2	5043-1013	Tubing Clip
1	5181-1519	CAN cable, Agilent module to module, 1 m
1	5500-1246	Capillary ST 0.17 mm x 500 mm SI/SI
1	5500-1217	Capillary ST 0.17 mm x 900 mm SI/SX ps-ps
3	5063-6527	Tubing assembly, i.d. 6 mm, o.d. 9 mm, 1.2 m (to waste)
1	G1311-90107	Algae note
3	5500-1169	Y Tube Connector ID6.4
3	5500-1155	Tube Connector, 90 degree, ID 6.4
1	5043-1372	Tubing Connector Leak 3-1
2	5043-1373	Tubing Connector Leak Cap

10
Identifying Cables

This chapter provides information on cables used with the Agilent InfinityLab LC Series modules.

Cable Overview

NOTE Never use cables other than the ones supplied by Agilent Technologies to ensure proper functionality and compliance with safety or EMC regulations.

Analog cables

p/n	Description
35900-60750	Agilent 35900A A/D converter
01046-60105	Analog cable (BNC to general purpose, spade lugs)

Remote cables

p/n	Description
5188-8029	ERI to general purpose
5188-8044	Remote Cable ERI – ERI
5188-8045	Remote Cable APG – ERI
5061-3378	Remote Cable to 35900 A/D converter
01046-60201	Agilent module to general purpose
5188-8057	Fraction Collection ERI remote Y-cable

CAN cables

p/n	Description
5181-1516	CAN cable, Agilent module to module, 0.5 m
5181-1519	CAN cable, Agilent module to module, 1 m

LAN cables

p/n	Description
5023-0203	Cross-over network cable, shielded, 3 m (for point to point connection)
5023-0202	Twisted pair network cable, shielded, 7 m (for point to point connection)

RS-232 cables (not for FUSION board)

p/n	Description
RS232-61601	RS-232 cable, 2.5 m Instrument to PC, 9-to-9 pin (female). This cable has special pin-out, and is not compatible with connecting printers and plotters. It's also called "Null Modem Cable" with full handshaking where the wiring is made between pins 1-1, 2-3, 3-2, 4-6, 5-5, 6-4, 7-8, 8-7, 9-9.
5181-1561	RS-232 cable, 8 m

USB cables

p/n	Description
5188-8050	USB A M-USB Mini B 3 m (PC-Module)
5188-8049	USB A F-USB Mini B M OTG (Module to Flash Drive)

Analog Cables

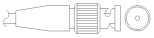

One end of these cables provides a BNC connector to be connected to Agilent modules. The other end depends on the instrument to which connection is being made.

Agilent Module to 35900 A/D converters

p/n 35900-60750	35900	Pin Agilent module	Signal Name
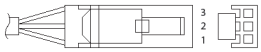	1		Not connected
	2	Shield	Analog -
	3	Center	Analog +

Agilent Module to BNC Connector

p/n 8120-1840	Pin BNC	Pin Agilent module	Signal Name
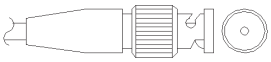	Shield	Shield	Analog -
	Center	Center	Analog +

Agilent Module to General Purpose

p/n 01046-60105	Pin	Pin Agilent module	Signal Name
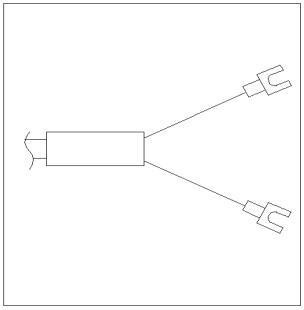	1		Not connected
	2	Black	Analog -
	3	Red	Analog +

Remote Cables

ERI (Enhanced Remote Interface)

5188-8029 ERI to general purpose

p/n 5188-8029	pin	Color code	Enhanced Remote	Classic Remote	Active (TTL)
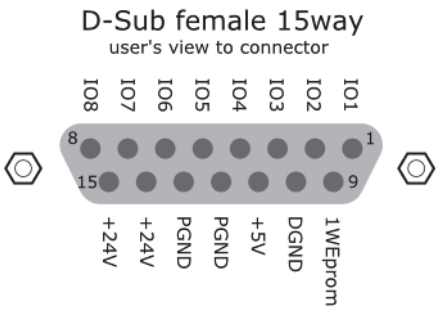	1	white	IO1	START REQUEST	Low
	2	brown	IO2	STOP	Low
	3	green	IO3	READY	High
	4	yellow	IO4	POWER ON	High
	5	grey	IO5	NOT USED	
	6	pink	IO6	SHUT DOWN	Low
	7	blue	IO7	START	Low
	8	red	IO8	PREPARE	Low
	9	black	1wire DATA		
	10	violet	DGND		
	11	grey-pink	+5V ERI out		
	12	red-blue	PGND		
	13	white-green	PGND		
	14	brown-green	+24V ERI out		
	15	white-yellow	+24V ERI out		
	NC	yellow-brown			

5188-8044 ERI to ERI (Connector D_Subminiature 15 pin)

Table 10 5188-8044 ERI to ERI

p/n 5188-8044	Pin (ERI)	Signal	Pin (ERI)	Active (TTL)
	10	GND	10	
	1	Start Request	1	Low
	2	Stop	2	Low
	3	Ready	3	High
	5	Power on	5	High
	4	Future	4	
	6	Shut Down	6	Low
	7	Start	7	Low
	8	Prepare	8	Low
	Ground	Cable Shielding	NC	

5188-8045 ERI to APG (Connector D_Subminiature 15 pin (ERI), Connector D_Subminiature 9 pin (APG))

p/n 5188-8045	Pin (ERI)	Signal	Pin (APG)	Active (TTL)
	10	GND	1	
	1	Start Request	9	Low
	2	Stop	8	Low
	3	Ready	7	High
	5	Power on	6	High
	4	Future	5	
	6	Shut Down	4	Low
	7	Start	3	Low
	8	Prepare	2	Low
	Ground	Cable Shielding	NC	

5188-8057 ERI to APG and RJ45 (Connector D_Subminiature 15 pin (ERI), Connector D_Subminiature 9 pin (APG), Connector plug Cat5e (RJ45))

Table 11 5188-8057 ERI to APG and RJ45

p/n 5188-8057	Pin (ERI)	Signal	Pin (APG)	Active (TTL)	Pin (RJ45)
					
	10	GND	1		5
	1	Start Request	9	High	
	2	Stop	8	High	
	3	Ready	7	High	
	4	Fraction Trigger	5	High	4
	5	Power on	6	High	
	6	Shut Down	4	High	
	7	Start	3	High	
	8	Prepare	2	High	
	Ground	Cable Shielding	NC		

One end of these cables provides a Agilent Technologies APG (Analytical Products Group) remote connector to be connected to Agilent modules. The other end depends on the instrument to be connected to.

Agilent Module to Agilent 35900 A/D Converters

p/n 5061-3378	Pin 35900 A/D	Pin Agilent module	Signal Name	Active (TTL)
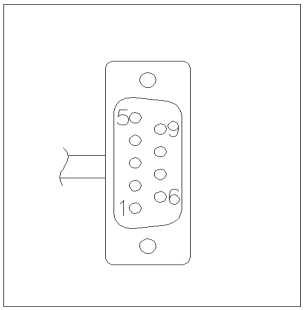	1 - White	1 - White	Digital ground	
	2 - Brown	2 - Brown	Prepare run	Low
	3 - Gray	3 - Gray	Start	Low
	4 - Blue	4 - Blue	Shut down	Low
	5 - Pink	5 - Pink	Not connected	
	6 - Yellow	6 - Yellow	Power on	High
	7 - Red	7 - Red	Ready	High
	8 - Green	8 - Green	Stop	Low
	9 - Black	9 - Black	Start request	Low

Agilent Module to General Purpose

p/n 01046-60201	Wire Color	Pin Agilent module	Signal Name	Active (TTL)
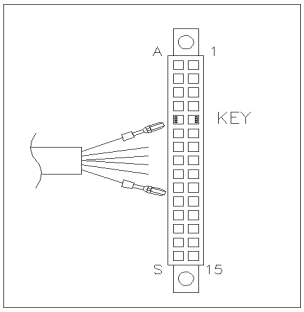	White	1	Digital ground	
	Brown	2	Prepare run	Low
	Gray	3	Start	Low
	Blue	4	Shut down	Low
	Pink	5	Not connected	
	Yellow	6	Power on	High
	Red	7	Ready	High
	Green	8	Stop	Low
	Black	9	Start request	Low

CAN/LAN Cables

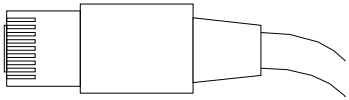

Both ends of this cable provide a modular plug to be connected to Agilent modules CAN or LAN connectors.

CAN Cables

p/n	Description
5181-1516	CAN cable, Agilent module to module, 0.5 m
5181-1519	CAN cable, Agilent module to module, 1 m

LAN Cables

p/n	Description
5023-0203	Cross-over network cable, shielded, 3 m (for point to point connection)
5023-0202	Twisted pair network cable, shielded, 7 m (for point to point connection)

RS-232 Cable Kit

p/n	Description
RS232-61601	RS-232 cable, 2.5 m Instrument to PC, 9-to-9 pin (female). This cable has special pin-out, and is not compatible with connecting printers and plotters. It's also called "Null Modem Cable" with full handshaking where the wiring is made between pins 1-1, 2-3, 3-2, 4-6, 5-5, 6-4, 7-8, 8-7, 9-9.
5181-1561	RS-232 cable, 8 m

Agilent 1200 Module to Printer

To connect a USB Flash Drive use a USB OTG cable with Mini-B plug and A socket.

p/n	Description
5188-8050	USB A M-USB Mini B 3 m (PC-Module)
5188-8049	USB A F-USB Mini B M OTG (Module to Flash Drive)

11
Hardware Information

This chapter provides detailed technical information about your binary pump.

Firmware Description

The firmware of the instrument consists of two independent sections:

- a non-instrument specific section, called *resident system*
- an instrument specific section, called *main system*

Resident System

This resident section of the firmware is identical for all Agilent 1100/1200/1220/1260/1290 series modules. Its properties are:

- the complete communication capabilities (CAN, LAN, USB and RS- 232C)
- memory management
- ability to update the firmware of the 'main system'

Main System

Its properties are:

- the complete communication capabilities (CAN, LAN, USB and RS- 232C)
- memory management
- ability to update the firmware of the 'resident system'

In addition the main system comprises the instrument functions that are divided into common functions like

- run synchronization through APG remote,
- error handling,
- diagnostic functions,
- or module specific functions like
  - internal events such as lamp control, filter movements,
  - raw data collection and conversion to absorbance.

Firmware Updates

Firmware updates can be done using the following tools (latest version should be used):

- Agilent Lab Advisor software with files on the hard disk (*)
- Firmware Update Tool with local files on the hard disk (*)
- Instant Pilot (G4208A) with files on a USB Flash Disk

(*) Required tools, firmware and documentation are available from the Agilent web: http://www.agilent.com/en-us/firmwareDownload?whid=69761

The file naming conventions are:

PPPP_RVVV_XXX.dlb, where

PPPP is the product number, for example, 1315B for the G1315B DAD,

R the firmware revision, for example, A for G1315B or B for the G1315C DAD,

VVV is the revision number, for example 650 is revision 6.50,

XXX is the build number of the firmware.

For instructions on firmware updates refer to section *Replacing Firmware* in chapter *"Maintenance"* or use the documentation provided with the *Firmware Update Tools*.

NOTE

Update of main system can be done in the resident system only. Update of the resident system can be done in the main system only.

Main and resident firmware must be from the same set.

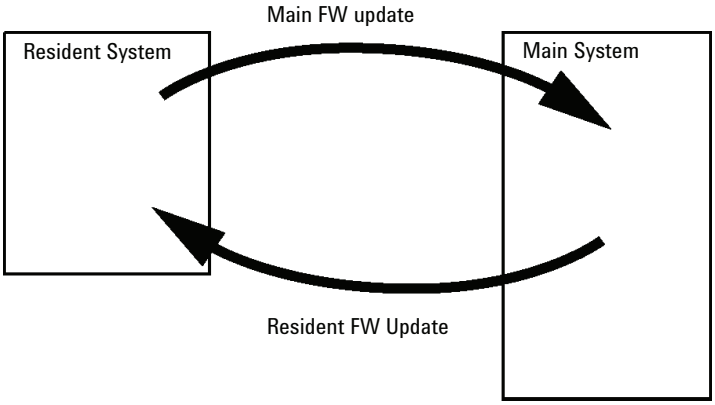

Figure 13 Firmware Update Mechanism

NOTE

Some modules are limited in downgrading due to their main board version or their initial firmware revision. For example, a G1315C DAD SL cannot be downgraded below firmware revision B.01.02 or to a A.xx.xx.

Some modules can be re-branded (e.g. G1314C to G1314B) to allow operation in specific control software environments. In this case the feature set of the target type are use and the feature set of the original are lost. After re-branding (e.g. from G1314B to G1314C), the original feature set is available again.

All these specific informations are described in the documentation provided with the firmware update tools.

The firmware update tools, firmware and documentation are available from the Agilent web.

- http://www.agilent.com/en-us/firmwareDownload?whid=69761

Electrical Connections

- The CAN bus is a serial bus with high-speed data transfer. The two connectors for the CAN bus are used for internal module data transfer and synchronization.
- One analog output provides signals for integrators or data handling systems.
- The ERI/REMOTE connector may be used in combination with other analytical instruments from Agilent Technologies if you want to use features such as start, stop, common shutdown, prepare, and so on.
- With the appropriate software, the LAN connector may be used to control the module from a computer through a LAN connection. This connector is activated and can be configured with the configuration switch.
- With the appropriate software, the USB connector may be used to control the module from a computer through a USB connection.
- The power input socket accepts a line voltage of 100 – 240 VAC ± 10 % with a line frequency of 50 or 60 Hz. Maximum power consumption varies by module. There is no voltage selector on your module because the power supply has wide-ranging capability. There are no externally accessible fuses because automatic electronic fuses are implemented in the power supply.

NOTE Never use cables other than the ones supplied by Agilent Technologies to ensure proper functionality and compliance with safety or EMC regulations.

Serial Number Information (ALL)

The serial number information on the instrument labels provide the following information:

CCXZZ00000	Format
CC	Country of manufacturing • DE = Germany • JP = Japan • CN = China
X	Alphabetic character A-Z (used by manufacturing)
ZZ	Alpha-numeric code 0-9, A-Z, where each combination unambiguously denotes a module (there can be more than one code for the same module)
00000	Serial number

Rear view of the module

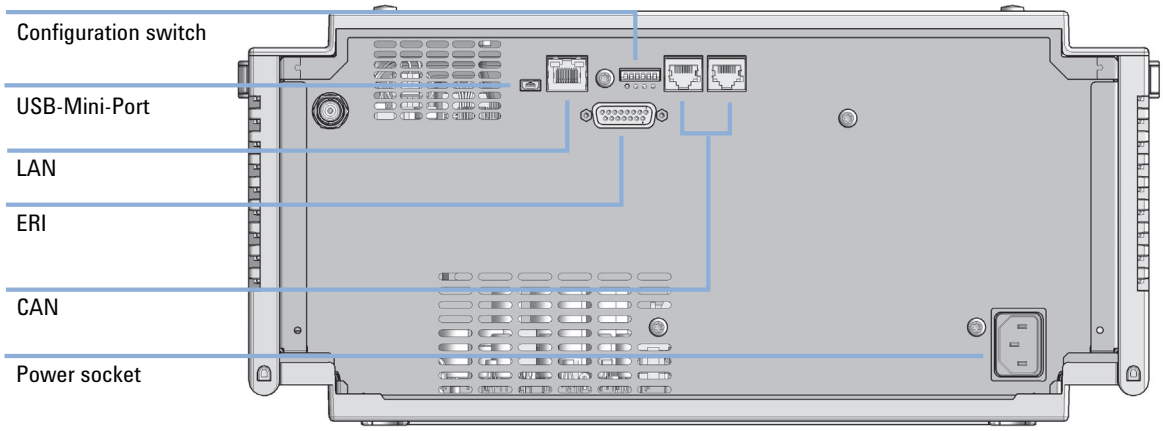

Figure 14 Rear view of the pump – electrical connections and label

Interfaces

The Agilent InfinityLab LC Series modules provide the following interfaces:

Table 12 Agilent InfinityLab LC Series Interfaces

Module	CAN	USB	LAN (on-board)	RS-232	Analog	APG (A) / ERI (E)	Special
Pumps							
G7104A Flexible Pump	2	No	Yes	Yes	1	A	
G7110B Isocratic Pump	2	Yes	Yes	No	No	E	
G7111A/B Quaternary Pump	2	Yes	Yes	No	No	E	
G7112B Binary Pump	2	Yes	Yes	No	No	E	
G7120A High Speed Pump	2	No	Yes	Yes	1	A	
Samplers							
G7129A/B Vialsampler	2	Yes	Yes	No	No	E	
G7167A/B Multisampler	2	Yes	Yes	No	No	E	
Detectors							
G7114A/B VWD	2	Yes	Yes	No	1	E	
G7115A DAD	2	Yes	Yes	No	1	E	
G7117A/B/C DAD	2	Yes	Yes	No	1	E	
G7121A/B FLD	2	Yes	Yes	No	1	E	
G7162A/B RID	2	Yes	Yes	No	1	E	
G7165A MWD	2	Yes	Yes	No	1	E	
Fraction Collectors							
G7159B FC	2	Yes	Yes	No	No	E	
G7166A VFC	2	No	No	No	No	No	Requires a host module with on-board LAN with minimum FW B.06.40 or C.06.40, or with additional G1369C LAN Card

Table 12 Agilent InfinityLab LC Series Interfaces

Module	CAN	USB	LAN (on-board)	RS-232	Analog	APG (A) / ERI (E)	Special
Others							
G7116A/B MCT	2	No	No	No	No	No	Requires a HOST module via CAN
G7122A Degasser	No	No	No	Yes	No	A	

NOTE The detector (DAD/MWD/FLD/VWD/RID) is the preferred access point for control via LAN. The inter-module communication is done via CAN.

- CAN connectors as interface to other modules
- LAN connector as interface to the control software
- RS-232C as interface to a computer
- USB (Universal Series Bus) as interface to a computer
- REMOTE connector as interface to other Agilent products
- Analog output connector(s) for signal output

Overview Interfaces

CAN

The CAN is inter-module communication interface. It is a 2-wire serial bus system supporting high speed data communication and real-time requirement.

LAN

The modules have either an interface slot for an LAN card (e.g. Agilent G1369B/C LAN Interface) or they have an on-board LAN interface (e.g. detectors G1315C/D DAD and G1365C/D MWD). This interface allows the control of the module/system via a PC with the appropriate control software. Some modules have neither on-board LAN nor an interface slot for a LAN card (e.g. G1170A Valve Drive or G4227A Flex Cube). These are hosted modules and require a Host module with firmware B.06.40 or later or with additional G1369C LAN Card.

NOTE If an Agilent detector (DAD/MWD/FLD/VWD/RID) is in the system, the LAN should be connected to the DAD/MWD/FLD/VWD/RID (due to higher data load). If no Agilent detector is part of the system, the LAN interface should be installed in the pump or autosampler.

USB

The USB interface replaces the RS-232 Serial interface in new FUSION generation modules. For details on USB refer to "USB (Universal Serial Bus)" on page 165.

Analog Signal Output

The analog signal output can be distributed to a recording device. For details refer to the description of the module's main board.

Remote (ERI)

The ERI (Enhanced Remote Interface) connector may be used in combination with other analytical instruments from Agilent Technologies if you want to use features as common shut down, prepare, and so on.

It allows easy connection between single instruments or systems to ensure coordinated analysis with simple coupling requirements.

The subminiature D connector is used. The module provides one remote connector which is inputs/outputs (wired- or technique).

To provide maximum safety within a distributed analysis system, one line is dedicated to **SHUT DOWN** the system's critical parts in case any module detects a serious problem. To detect whether all participating modules are switched on or properly powered, one line is defined to summarize the **POWER ON** state of all connected modules. Control of analysis is maintained by signal readiness **READY** for next analysis, followed by **START** of run and optional **STOP** of run triggered on the respective lines. In addition **PREPARE** and **START REQUEST** may be issued. The signal levels are defined as:

- standard TTL levels (0 V is logic true, + 5.0 V is false),
- fan-out is 10,
- input load is 2.2 kOhm against + 5.0 V, and
- output are open collector type, inputs/outputs (wired- or technique).

NOTE All common TTL circuits operate with a 5 V power supply. A TTL signal is defined as "low" or L when between 0 V and 0.8 V and "high" or H when between 2.0 V and 5.0 V (with respect to the ground terminal).

Table 13 ERI signal distribution

Pin	Signal	Description
1	START REQUEST	(L) Request to start injection cycle (for example, by start key on any module). Receiver is the autosampler.
2	STOP	(L) Request to reach system ready state as soon as possible (for example, stop run, abort or finish and stop injection). Receiver is any module performing run-time controlled activities.
3	READY	(H) System is ready for next analysis. Receiver is any sequence controller.
4	POWER ON	(H) All modules connected to system are switched on. Receiver is any module relying on operation of others.
5		Not used
6	SHUT DOWN	(L) System has serious problem (for example, leak: stops pump). Receiver is any module capable to reduce safety risk.
7	START	(L) Request to start run / timetable. Receiver is any module performing run-time controlled activities.
8	PREPARE	(L) Request to prepare for analysis (for example, calibration, detector lamp on). Receiver is any module performing pre-analysis activities.

Special Interfaces

There is no special interface for this module.

ERI (Enhanced Remote Interface)

ERI replaces the AGP Remote Interface that is used in the HP 1090/1040/1050/1100 HPLC systems and Agilent 1100/1200/1200 Infinity HPLC modules. All new 1200 Infinity II products using the FUSION core

electronics use ERI. This interface is already used in the Agilent Universal Interface Box 2 (UIB2)

ERI Description

The ERI interface contains eight individual programmable input/output pins. In addition, it provides 24 V power and 5 V power and a serial data line to detect and recognize further add-ons that could be connected to this interface. This way the interface can support various additional devices like sensors, triggers (in and out) and small controllers, etc.

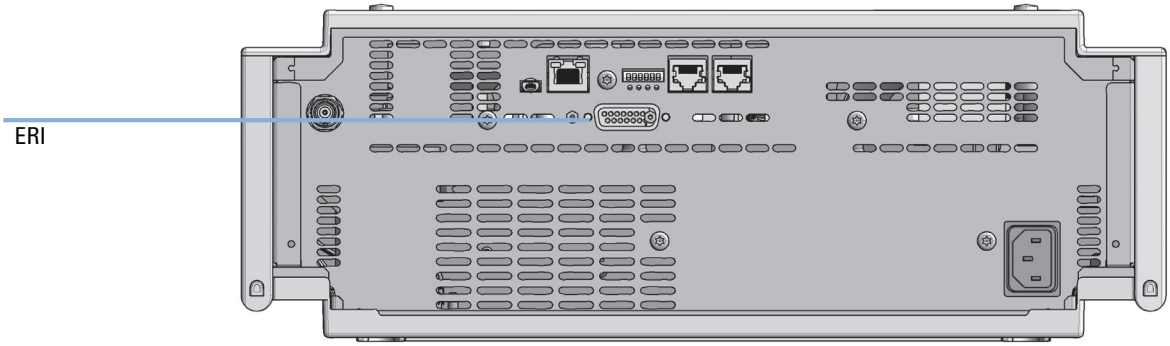

Figure 15 Location of the ERI interface (example shows a G7114A/B VWD)

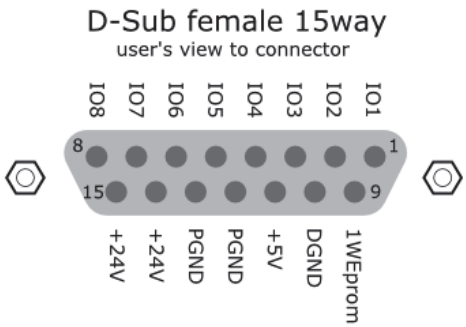

Pin	Enhanced Remote
1	IO 1 (START REQUEST)
2	IO 2 (STOP)
3	IO 3 (READY)
4	IO 4 (POWER ON)
5	IO 5 (NOT USED)
6	IO 6 (SHUT DOWN)
7	IO 7 (START)
8	IO 8 (PREPARE)
9	1 wire DATA
10	DGND
11	+5 V ERI out
12	PGND
13	PGND
14	+24 V ERI out
15	+24 V ERI out

IO (Input/Output) Lines

- Eight generic bi-directional channels (input or output).
- Same as the APG Remote.
- Devices like valves, relays, ADCs, DACs, controllers can be supported/controlled.

1-Wire Data (Future Use)

This serial line can be used to read out an EPROM or write into an EPROM of a connected ERI-device. The firmware can detect the connected type of device automatically and update information in the device (if required).

5V Distribution (Future Use)

- Available directly after turn on oft the hosting module (assures that certain base functionality of the device can be detected by firmware).
- For digital circuits or similar.
- Provided 500 mA maximum.
- Short-circuit proof with automatic switch off (by firmware).

24V Distribution (Future Use)

- Available by firmware command (defined turn on/off).
- For devices that need higher power
  - Class 0: 0.5 A maximum (12 W)
  - Class 1: 1.0 A maximum (24 W)
  - Class 2: 2.0 A maximum (48 W)
- Class depends on hosting module's internal power overhead.
- If a connected device requires more power the firmware detects this (overcurrent detection) and provides the information to the user interface.
- Fuse used for safety protection (on board).
- Short circuit will be detected through hardware.

USB (Universal Serial Bus)

USB (Universal Serial Bus) - replaces RS232, supports:

- a PC with control software (for example Agilent Lab Advisor)
- USB Flash Disk

Setting the 6-bit Configuration Switch

The 6-bit configuration switch is located at the rear of the module with FUSION electronics. Switch settings provide configuration parameters for LAN and instrument specific initialization procedures.

All modules with FUSION electronics:

- Default is ALL switches DOWN (best settings).
  - Default IP address for LAN 192.168.254.11
- For specific LAN modes switches 4-5 must be set as required.
- For boot resident/cold start modes switches 1+2 or 6 must be UP.

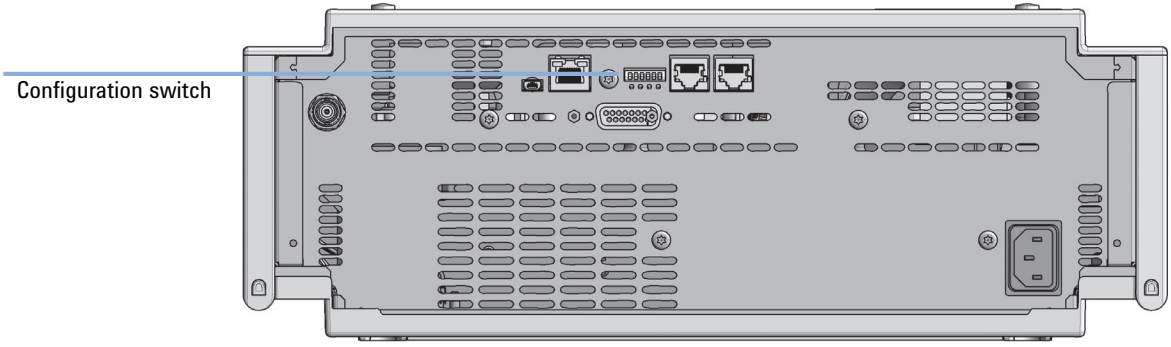

Figure 16 Location of Configuration switch (example shows a G7114A/B VWD)

Table 14 6-bit Configuration Switch

	Mode	Function/Setting				
	Switch 1	**Switch 2**	**Switch 3**	**Switch 4**	**Switch 5**	**Switch 6**
COM[1]	**0**	n.a.[2]	n.a.	LAN Init Mode		n.a.
Use Default IP Address[3]		0	0	0	0	0
Use Stored IP Address		0	0	0	1	0
Use DHCP to request IP Address[4]		0	0	1	0	0
Test	**1**	**System**	**n.a.**	**n.a.**	**n.a.**	**ColdStart**
Boot Main System / Keep Data		0	0	0	0	0
Boot Resident System / Keep Data		1	0	0	0	0
Boot Main System / Revert to Default Data		0	0	0	0	1
Boot Resident System / Revert to Default Data		1	0	0	0	1

1 When selecting mode COM, settings are stored to non-volatile memory. When selecting mode TEST, COM settings are taken from non-volatile memory.

2 not assigned - Always keep these switches on position ‘0’ (off)

3 Default IP Address is 192.168.254.11

4 Host Name will be the MAC address.

Special Settings

Boot-Resident/Main

Firmware update procedures may require this mode in case of firmware loading errors (main/resident firmware part).

If you use the following switch settings and power the instrument up again, the instrument firmware stays in the resident/main mode. In resident mode, it is not operable as a module. It only uses basic functions of the operating system for example, for communication. In this mode the main firmware can be loaded (using update utilities).

Forced Cold Start

A forced cold start can be used to bring the module into a defined mode with default parameter settings.

- Boot Main System / Revert to Default Data

  The instrument will boot to main mode and changes to the module's default parameter. May be also required to load resident firmware into the module.

- Boot Resident System / Revert to Default Data

  The instrument will boot to resident mode and changes to the module's default parameter. May be also required to load main firmware into the module.

CAUTION

Loss of data

Forced cold start erases all methods and data stored in the non-volatile memory. Exceptions are calibration settings, diagnosis and repair log books which will not be erased.

➔ Save your methods and data before executing a forced cold start.

If you use the following switch settings and power the instrument up again, it will start as described above.

Table 15 Boot Resident / Forced Coldstart

	SW1	SW2	SW3	SW4	SW5	SW6	Init Mode
	1	0	0	0	0	0	Boot Main System / Keep Data
	1	1	0	0	0	0	Boot Resident System / Keep Data
	1	0	0	0	0	1	Boot Main System / Revert to Default Data
	1	1	0	0	0	1	Boot Resident System / Revert to Default Data
	Note: The setting '0' (down) is essential.						

Early Maintenance Feedback

Maintenance requires the exchange of components which are subject to wear or stress. Ideally, the frequency at which components are exchanged should be based on the intensity of usage of the module and the analytical conditions, and not on a predefined time interval. The early maintenance feedback (**EMF**) feature monitors the usage of specific components in the instrument, and provides feedback when the user-selectable limits have been exceeded. The visual feedback in the user interface provides an indication that maintenance procedures should be scheduled.

EMF Counters

EMF counters increment with use and can be assigned a maximum limit which provides visual feedback in the user interface when the limit is exceeded. Some counters can be reset to zero after the required maintenance procedure.

Using the EMF Counters

The user-settable **EMF** limits for the **EMF Counters** enable the early maintenance feedback to be adapted to specific user requirements. The useful maintenance cycle is dependent on the requirements for use. Therefore, the definition of the maximum limits need to be determined based on the specific operating conditions of the instrument.

Setting the EMF Limits

The setting of the **EMF** limits must be optimized over one or two maintenance cycles. Initially the default **EMF** limits should be set. When instrument performance indicates maintenance is necessary, take note of the values displayed by the **EMF counters**. Enter these values (or values slightly less than the displayed values) as **EMF** limits, and then reset the **EMF counters** to zero. The next time the **EMF counters** exceed the new **EMF** limits, the **EMF** flag will be displayed, providing a reminder that maintenance needs to be scheduled.

Instrument Layout

The industrial design of the module incorporates several innovative features. It uses Agilent's E-PAC concept for the packaging of electronics and mechanical assemblies. This concept is based upon the use of expanded polypropylene (EPP) layers of foam plastic spacers in which the mechanical and electronic boards components of the module are placed. This pack is then housed in a metal inner cabinet which is enclosed by a plastic external cabinet. The advantages of this packaging technology are:

- virtual elimination of fixing screws, bolts or ties, reducing the number of components and increasing the speed of assembly/disassembly,
- the plastic layers have air channels molded into them so that cooling air can be guided exactly to the required locations,
- the plastic layers help cushion the electronic and mechanical parts from physical shock, and
- the metal inner cabinet shields the internal electronics from electromagnetic interference and also helps to reduce or eliminate radio frequency emissions from the instrument itself.

12
LAN Configuration

This chapter provides information on connecting the module to the Agilent ChemStation PC.

What You Have to Do First

The module has an on- board LAN communication interface.

NOTE This chapter is generic and may show figures that differ from your module. The functionality is the same.

1 Note the MAC (Media Access Control) address for further reference. The MAC or hardware address of the LAN interfaces is a world wide unique identifier. No other network device will have the same hardware address. The MAC address can be found on a label at the rear of the module underneath the configuration switch (see Figure 18 on page 174).

Part number of the detector main board
Revision Code, Vendor, Year and Week of assembly
MAC address
Country of Origin

Figure 17 MAC-Label

2 Connect the instrument's LAN interface (see Figure 18 on page 174) to
- the PC network card using a crossover network cable (point-to-point) or
- a hub or switch using a standard LAN cable.

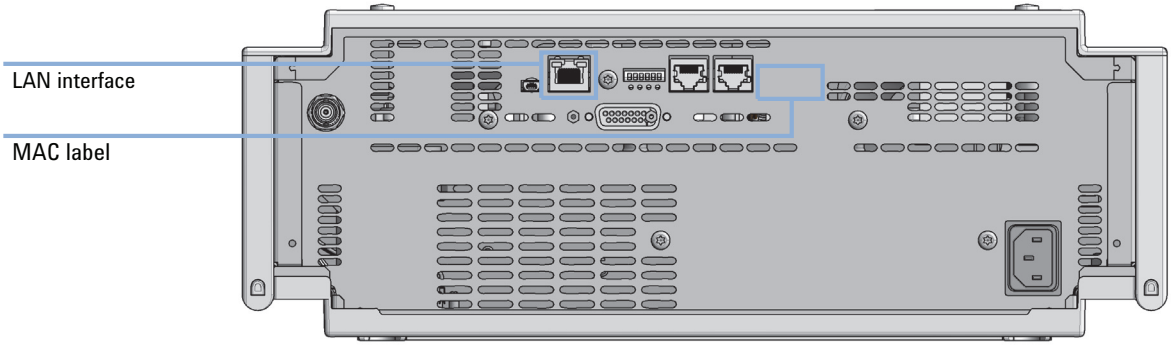

Figure 18 Location of LAN interfaces and MAC label

TCP/IP parameter configuration

To operate properly in a network environment, the LAN interface must be configured with valid TCP/IP network parameters. These parameters are:

- IP address
- Subnet Mask
- Default Gateway

The TCP/IP parameters can be configured by the following methods:

- by automatically requesting the parameters from a network-based DHCP Server (using the so-called Dynamic Host Configuration Protocol). This mode requires a LAN-onboard Module or a G1369C LAN Interface card, see “Setup (DHCP)” on page 180
- by manually setting the parameters using Telnet
- by manually setting the parameters using the Instant Pilot (G4208A)

The LAN interface differentiates between several initialization modes. The initialization mode (short form ‘init mode’) defines how to determine the active TCP/IP parameters after power-on. The parameters may be derived non-volatile memory or initialized with known default values. The initialization mode is selected by the configuration switch, see Table 16 on page 177.

Configuration Switches

The configuration switch can be accessed at the rear of the module.

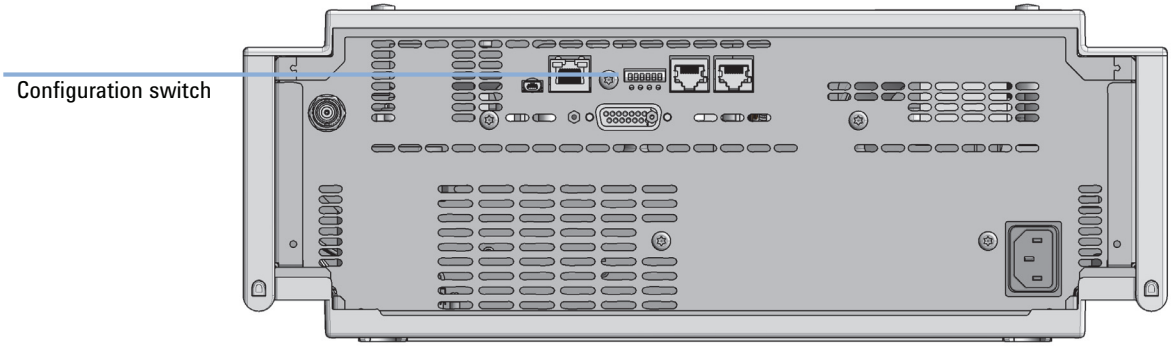

Figure 19 Location of Configuration switch (example shows a G7114A/B VWD)

The module is shipped with all switches set to OFF, as shown above.

NOTE To perform any LAN configuration, SW1 and SW2 must be set to OFF.

Initialization Mode Selection

The following initialization (init) modes are selectable:

Table 16 Initialization Mode Switches

	SW1	SW2	SW3	SW4	SW5	SW6	Init Mode
	0	0	0	0	0	0	Use Default IP Address
	0	0	0	0	1	0	Use Stored IP Address
	0	0	0	1	0	0	Use DHCP
	Note: The setting ‘0’ (down) is essential.						

Default IP address for LAN is 192.168.254.11.

DHCP address is the module’s LAN MAC address.

Using Stored

When initialization mode **Using Stored** is selected, the parameters are taken from the non-volatile memory of the module. The TCP/IP connection will be established using these parameters. The parameters were configured previously by one of the described methods.

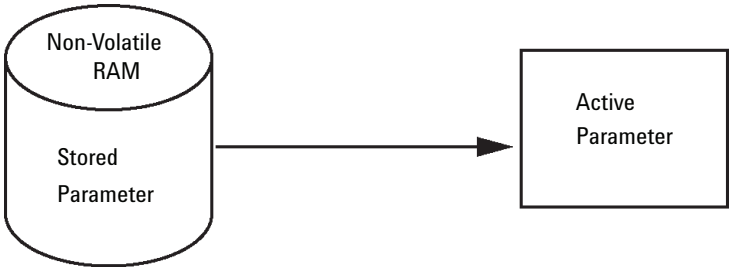

Figure 20 Using Stored (Principle)

Using Default

When **Using Default** is selected, the factory default parameters are taken instead. These parameters enable a TCP/IP connection to the LAN interface without further configuration, see Table 17 on page 178.

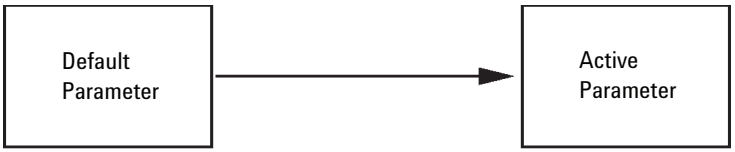

Figure 21 Using Default (Principle)

NOTE Using the default address in your local area network may result in network problems. Take care and change it to a valid address immediately.

Table 17 Using Default Parameters

IP address:	192.168.254.11
Subnet Mask:	255.255.255.0
Default Gateway	not specified

Since the default IP address is a so-called local address, it will not be routed by any network device. Thus, the PC and the module must reside in the same subnet.

The user may open a Telnet session using the default IP address and change the parameters stored in the non-volatile memory of the module. He may then close the session, select the initialization mode Using Stored, power-on again and establish the TCP/IP connection using the new parameters.

When the module is wired to the PC directly (e.g. using a cross-over cable or a local hub), separated from the local area network, the user may simply keep the default parameters to establish the TCP/IP connection.

NOTE In the **Using Default** mode, the parameters stored in the memory of the module are not cleared automatically. If not changed by the user, they are still available, when switching back to the mode Using Stored.

Dynamic Host Configuration Protocol (DHCP)

General Information (DHCP)

The Dynamic Host Configuration Protocol (DHCP) is an auto configuration protocol used on IP networks. The DHCP functionality is available on all Agilent HPLC modules with on-board LAN Interface or LAN Interface Card G1369C, and “B”-firmware (B.06.40 or above) or modules with "D"-firmware. All modules should use latest firmware from the same set.

When the initialization mode “DHCP” is selected, the card tries to download the parameters from a DHCP Server. The parameters obtained become the active parameters immediately. They are not stored to the non-volatile memory of the card.

Besides requesting the network parameters, the card also submits its hostname to the DHCP Server. The hostname equals the MAC address of the card, e.g. *0030d3177321*. It is the DHCP server's responsibility to forward the hostname/address information to the Domain Name Server. The card does not offer any services for hostname resolution (e.g. NetBIOS).

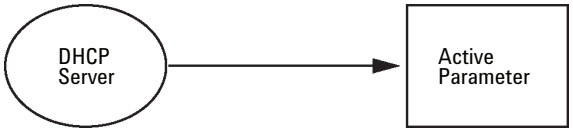

Figure 22 DHCP (Principle)

NOTE

1. It may take some time until the DHCP server has updated the DNS server with the hostname information.
2. It may be necessary to fully qualify the hostname with the DNS suffix, e.g. *0030d3177321.country.company.com*.
3. The DHCP server may reject the hostname proposed by the card and assign a name following local naming conventions.

Setup (DHCP)

The DHCP functionality is available on all Agilent HPLC modules with on-board LAN Interface or LAN Interface Card G1369C, and “B”-firmware (B.06.40 or above) or modules with "D"-firmware. All modules should use latest firmware from the same set.

1 Note the MAC address of the LAN interface (provided with G1369C LAN Interface Card or Main Board). This MAC address is on a label on the card or at the rear of the main board, e.g. *0030d3177321*.

   On the Instant Pilot the MAC address can be found under **Details** in the LAN section.

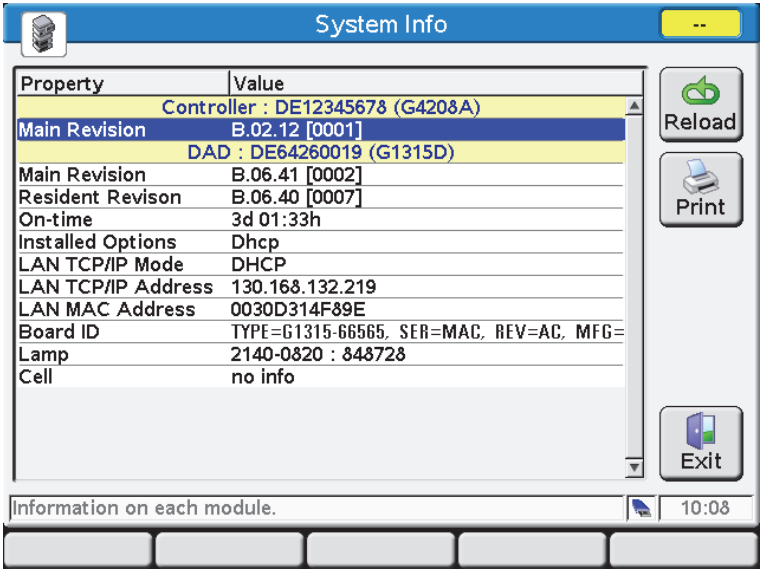

Figure 23 LAN Setting on Instant Pilot

2 Set the Configuration Switch to DHCP either on the G1369C LAN Interface Card or the main board of above mentioned modules.

Table 18 G1369C LAN Interface Card (configuration switch on the card)

SW 4	SW 5	SW 6	SW 7	SW 8	Initialization Mode
ON	OFF	OFF	OFF	OFF	DHCP

Table 19 LC Modules with 8-bit configuration switch (B-firmware) (configuration switch at rear of the instrument)

SW 6	SW 7	SW 8	Initialization Mode
ON	OFF	OFF	DHCP

3 Turn on the module that hosts the LAN interface.

4 Configure your Control Software (e.g. OpenLAB CDS ChemStation Edition, Lab Advisor, Firmware Update Tool) and use MAC address as host name, e.g. *0030d3177321*.

The LC system should become visible in the control software (see Note in section "General Information (DHCP)" on page 179).

Manual Configuration

Manual configuration only alters the set of parameters stored in the non-volatile memory of the module. It never affects the currently active parameters. Therefore, manual configuration can be done at any time. A power cycle is mandatory to make the stored parameters become the active parameters, given that the initialization mode selection switches are allowing it.

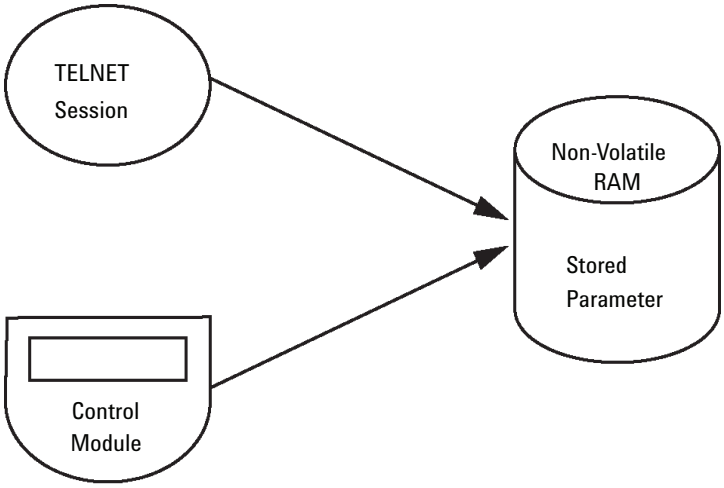

Figure 24 Manual Configuration (Principle)

With Telnet

Whenever a TCP/IP connection to the module is possible (TCP/IP parameters set by any method), the parameters may be altered by opening a Telnet session.

1 Open the system (DOS) prompt window by clicking on Windows **START** button and select **"Run..."**. Type "cmd" and press OK.

2 Type the following at the system (DOS) prompt:

- `c:\>telnet <IP address>` or
- `c:\>telnet <host name>`

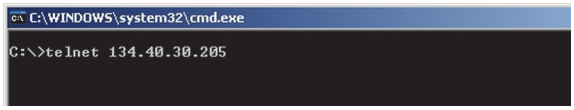

Figure 25 Telnet - Starting a session

where <IP address> may be the assigned address from a Bootp cycle, a configuration session with the Handheld Controller, or the default IP address (see "Configuration Switches" on page 176).

When the connection was established successfully, the module responds with the following:

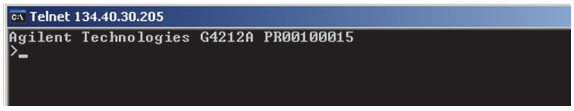

Figure 26 A connection to the module is made

3 Type
? and press enter to see the available commands.

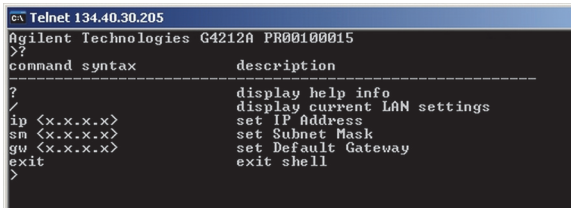

Figure 27 Telnet Commands

Table 20 Telnet Commands

Value	Description
?	displays syntax and descriptions of commands
/	displays current LAN settings
ip <x.x.x.x>	sets new ip address
sm <x.x.x.x>	sets new subnet mask
gw <x.x.x.x>	sets new default gateway
exit	exits shell and saves all changes

4 To change a parameter follows the style:

- parameter value, for example:
  `ip 134.40.28.56`

Then press [Enter], where parameter refers to the configuration parameter you are defining, and value refers to the definitions you are assigning to that parameter. Each parameter entry is followed by a carriage return.

5 Use the “/” and press Enter to list the current settings.

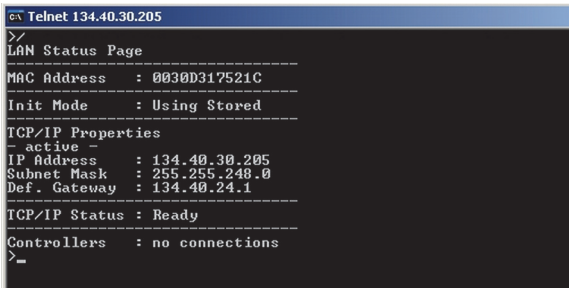

Figure 28 Telnet - Current settings in "Using Stored" mode

information about the LAN interface
MAC address, initialization mode
Initialization mode is Using Stored
active TCP/IP settings

TCP/IP status - here ready
connected to PC with controller software (e.g. Agilent ChemStation), here not connected

6 Change the IP address (in this example 192.168.254.12) and type “/” to list current settings.

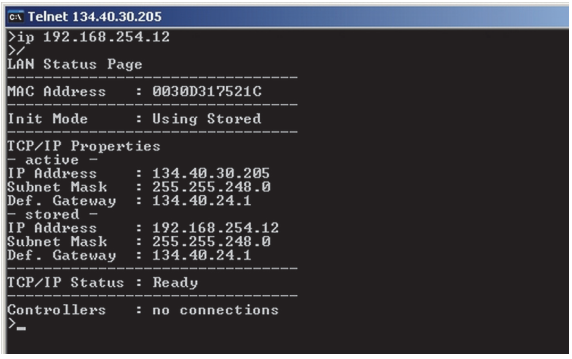

Figure 29 Telnet - Change IP settings

change of IP setting to
Initialization mode is Using Stored

active TCP/IP settings

stored TCP/IP settings in non-volatile memory

connected to PC with controller software (e.g. Agilent ChemStation), here not connected

7 When you have finished typing the configuration parameters, type **`exit`** and press **Enter** to exit with storing parameters.

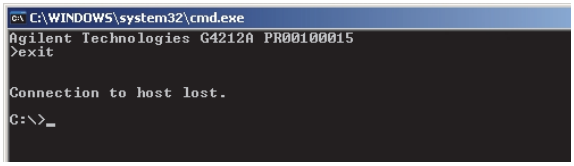

Figure 30 Closing the Telnet Session

NOTE If the Initialization Mode Switch is changed now to “Using Stored” mode, the instrument will take the stored settings when the module is re-booted. In the example above it would be 192.168.254.12.

13
Appendix

This chapter provides addition information on safety, legal and web.

General Safety Information

General Safety Information

The following general safety precautions must be observed during all phases of operation, service, and repair of this instrument. Failure to comply with these precautions or with specific warnings elsewhere in this manual violates safety standards of design, manufacture, and intended use of the instrument. Agilent Technologies assumes no liability for the customer's failure to comply with these requirements.

WARNING

Ensure the proper usage of the equipment.

The protection provided by the equipment may be impaired.

➔ The operator of this instrument is advised to use the equipment in a manner as specified in this manual.

Safety Standards

This is a Safety Class I instrument (provided with terminal for protective earthing) and has been manufactured and tested according to international safety standards.

General

Do not use this product in any manner not specified by the manufacturer. The protective features of this product may be impaired if it is used in a manner not specified in the operation instructions.

Before Applying Power

WARNING

Wrong voltage range, frequency or cabling

Personal injury or damage to the instrument

- Verify that the voltage range and frequency of your power distribution matches to the power specification of the individual instrument.
- Never use cables other than the ones supplied by Agilent Technologies to ensure proper functionality and compliance with safety or EMC regulations.
- Make all connections to the unit before applying power.

NOTE

Note the instrument's external markings described under "Safety Symbols" on page 192.

Ground the Instrument

WARNING

Missing electrical ground

Electrical shock

- If your product is provided with a grounding type power plug, the instrument chassis and cover must be connected to an electrical ground to minimize shock hazard.
- The ground pin must be firmly connected to an electrical ground (safety ground) terminal at the power outlet. Any interruption of the protective (grounding) conductor or disconnection of the protective earth terminal will cause a potential shock hazard that could result in personal injury.

Do Not Operate in an Explosive Atmosphere

WARNING

Presence of flammable gases or fumes

Explosion hazard

→ Do not operate the instrument in the presence of flammable gases or fumes.

Do Not Remove the Instrument Cover

WARNING

Instrument covers removed

Electrical shock

→ Do Not Remove the Instrument Cover

→ Only Agilent authorized personnel are allowed to remove instrument covers. Always disconnect the power cables and any external circuits before removing the instrument cover.

Do Not Modify the Instrument

Do not install substitute parts or perform any unauthorized modification to the product. Return the product to an Agilent Sales and Service Office for service and repair to ensure that safety features are maintained.

In Case of Damage

WARNING

Damage to the module

Personal injury (for example electrical shock, intoxication)

→ Instruments that appear damaged or defective should be made inoperative and secured against unintended operation until they can be repaired by qualified service personnel.

Solvents

WARNING

Toxic, flammable and hazardous solvents, samples and reagents

The handling of solvents, samples and reagents can hold health and safety risks.

- When working with these substances observe appropriate safety procedures (for example by wearing goggles, safety gloves and protective clothing) as described in the material handling and safety data sheet supplied by the vendor, and follow good laboratory practice.
- Do not use solvents with an auto-ignition temperature below 200 °C (392 °F). Do not use solvents with a boiling point below 56 °C (133 °F).
- Avoid high vapor concentrations. Always keep the temperature in the sample compartment at least 25 K below the boiling point of the solvent used.
- Do not operate the instrument in an explosive atmosphere.
- Reduce the volume of substances to the minimum required for the analysis.
- Never exceed the maximum permissible volume of solvents (8 L) in the solvent cabinet. Do not use bottles that exceed the maximum permissible volume as specified in the usage guideline for solvent cabinet.
- Ground the waste container.
- Regularly check the filling level of the waste container. The residual free volume in the waste container must be large enough to collect the waste liquid.
- To achieve maximal safety, regularly check the tubing for correct installation.

NOTE

For details, see the usage guideline for the solvent cabinet. A printed copy of the guideline has been shipped with the solvent cabinet, electronic copies are available in the Agilent Information Center or via the Internet.

Safety Symbols

Table 21 Symbols

	The apparatus is marked with this symbol when the user should refer to the instruction manual in order to protect risk of harm to the operator and to protect the apparatus against damage.
	Indicates dangerous voltages.
	Indicates a protected ground terminal.
	The apparatus is marked with this symbol when hot surfaces are available and the user should not touch it when heated up.
	Cooling unit is designed as vapor-compression refrigeration system. Contains fluorinated greenhouse gas (refrigerant) according to the Kyoto protocol. For specifications of refrigerant, charge capacity, carbon dioxide equivalent (CDE), and global warming potential (GWP) see instrument label.
	Confirms that a manufactured product complies with all applicable European Community directives. The European Declaration of Conformity is available at: http://regulations.corporate.agilent.com/DoC/search.htm
	Manufacturing date.
	Power symbol indicates On/Off. The apparatus is not completely disconnected from the mains supply when the power switch is in the Off position
	Pacemaker Magnets could affect the functioning of pacemakers and implanted heart defibrillators. A pacemaker could switch into test mode and cause illness. A heart defibrillator may stop working. If you wear these devices keep at least 55 mm distance to magnets. Warn others who wear these devices from getting too close to magnets.

Table 21 Symbols

	Magnetic field Magnets produce a far-reaching, strong magnetic field. They could damage TVs and laptops, computer hard drives, credit and ATM cards, data storage media, mechanical watches, hearing aids and speakers. Keep magnets at least 25 mm away from devices and objects that could be damaged by strong magnetic fields.
	Indicates a pinching or crushing hazard
	Indicates a piercing or cutting hazard.

WARNING

A WARNING

alerts you to situations that could cause physical injury or death.

→ Do not proceed beyond a warning until you have fully understood and met the indicated conditions.

CAUTION

A CAUTION

alerts you to situations that could cause loss of data, or damage of equipment.

→ Do not proceed beyond a caution until you have fully understood and met the indicated conditions.

Waste Electrical and Electronic Equipment Directive

Abstract

The Waste Electrical and Electronic Equipment (WEEE) Directive (2002/96/EC), adopted by EU Commission on 13 February 2003, is introducing producer responsibility on all electric and electronic appliances starting with 13 August 2005.

NOTE

This product complies with the WEEE Directive (2002/96/EC) marking requirements. The affixed label indicates that you must not discard this electrical/electronic product in domestic household waste.

Product Category:

With reference to the equipment types in the WEEE Directive Annex I, this product is classed as a Monitoring and Control Instrumentation product.

NOTE

Do not dispose of in domestic household waste

To return unwanted products, contact your local Agilent office, or see http://www.agilent.com for more information.

Radio Interference

Cables supplied by Agilent Technologies are screened to provide optimized protection against radio interference. All cables are in compliance with safety or EMC regulations.

Test and Measurement

If test and measurement equipment is operated with unscreened cables, or used for measurements on open set-ups, the user has to assure that under operating conditions the radio interference limits are still met within the premises.

Sound Emission

Manufacturer's Declaration

This statement is provided to comply with the requirements of the German Sound Emission Directive of 18 January 1991.

This product has a sound pressure emission (at the operator position) < 70 dB.

- Sound Pressure Lp < 70 dB (A)
- At Operator Position
- Normal Operation
- According to ISO 7779:1988/EN 27779/1991 (Type Test)

Agilent Technologies on the Internet

For the latest information on products and services visit our worldwide web site on the Internet at:

http://www.agilent.com

Index

R

S

T

U

V

W

www.agilent.com

In This Book

This manual contains ...

The manual describes the following:

- Introduction
- Site Requirements and Specifications
- Using the Pump
- Optimizing Performance
- Troubleshooting and Diagnostics
- Error Information
- Test Functions and Calibration
- Maintenance
- Parts and Materials
- Cables
- Hardware Information
- LAN Configuration
- Appendix

Printed in Germany
02/2017

G4782-90000

Agilent Technologies