Agilent 7697A Headspace Sampler

Leak Testing the Headspace Sampler

This document discusses leak testing in the headspace sampler (HS). Chromatographic symptoms such as loss of sensitivity can result from leaks and restrictions. Use the following set of tests for verifying leaks and restrictions within the HS. Verify that the GC is leak free before checking for leaks within the HS.

Parts Supplied

Table 1 G4556-67010 Leak Test Kit

Description	Part Number
Leak Test Kit	**G4556-67010**
• Leak Test Instruction Sheet/Quick Reference Guide	G4556-90001
• Blue leak test vial	G4556-20600
• six port valve cap	G6600-80039
• No hole ferrule	5181-7458
• 11-mm low bleed septa, 5 PK	5182-3413
• Plug, 1/8-in tube fitting, nylon	0100-2414

Leak Check General Procedure

When checking for leaks, consider the system in three parts: external leak points, GC leak points, and HS leak points.

- **External leak points** include the gas cylinder (or gas purifier), the regulator and its fittings, the supply shutoff valves, and the connections to the HS and GC supply fittings.
- **For GC leak points**, refer to the GC user documentation.
- **HS leak points** include the connections at the six port valve (sample loop and transfer line), the transfer line connection to the GC inlet, and the connections for the sampling probe.

WARNING **Hydrogen (H2) is flammable and is an explosion hazard when mixed with air in an enclosed space (for example, a flow meter). Purge flow meters with inert gas as needed. Always measure gases individually.**

WARNING **Hazardous sample may be present.**

1. Gather the following:
   - Electronic leak detector capable of detecting the gas type (Agilent part number G3388A or G3388B).
   - 7/16-inch, 9/16-inch, 1/4-inch, and 3/16-inch wrenches for tightening Swagelok and column fittings.
   - Leak test kit, Agilent part number G4556-67010. Includes: no hole ferrule, 11 mm low bleed septa, headspace (blue) leak test vial, 1/8-in. nylon tube fitting plug, 1/16-in. stainless steel ZDV plug (six port valve cap).
2. Check any potential leak points associated with any recent maintenance.
3. Check for external leaks. See “Checking for External Leaks” on page 4.
4. Disconnect the HS from the GC, and check the GC for leaks. See the GC user documentation.

5 Check HS fittings and connections that undergo thermal cycling, since thermal cycling tends to loosen some fitting types. Use the electronic leak detector to determine if a fitting is leaking.
   - Start by checking any newly made connections first.
6 Run the HS **Restriction & pressure decay** test. See "To Run the Restriction and Pressure Decay Test" on page 6.
7 Run the HS **Cross port leak test**. See "To Run the Cross Port Leak Test" on page 19.

Checking for External Leaks

Figure 1 below shows typical external leak points to check. Check all fittings and correct as needed.

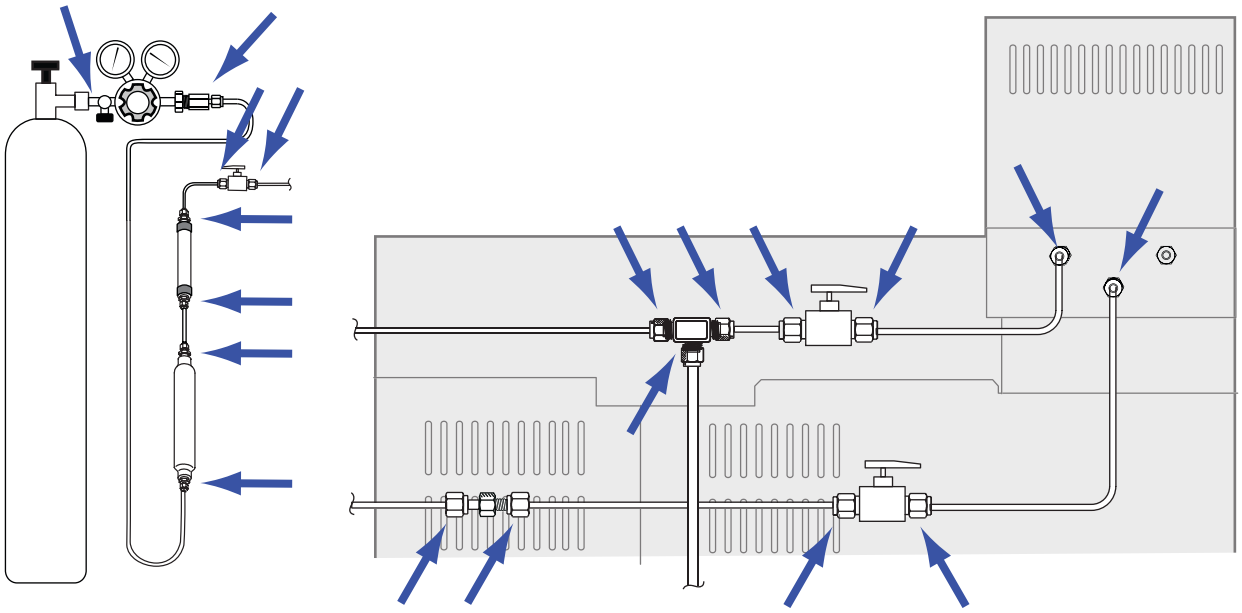

Figure 1 External leak points (HC configured with GC carrier gas control, with optional valves and tee fittings shown)

- Gas supply bulkhead fittings
- Gas cylinder fittings
- Regulator fittings
- Traps and/or Gas Clean filters
- Shut-off valves (if installed, not included in ship kit)
- Unions and tee fittings (if installed, not included in ship kit)
- Transfer line connection to the GC

Perform a pressure drop test.

CAUTION A pressure decay test cuts off carrier flow through the HS and GC. To prevent damage to the flow path components (column, inlet liner, and so forth), cool the HS and GC before beginning.

1. Cool the HS sample loop, transfer line, and GC inlet and column oven to prevent damage during the test.
2. Turn off the GC and HS.
3. Set the regulator pressure to 415 kPa (60 psi).
4. Fully turn the regulator pressure adjustment knob counterclockwise to shut the valve.
5. Wait 5 min. If there is a measurable drop in pressure, there is a leak in the external connections. No drop in pressure indicates that the external connections are not leaking.

To Run the Restriction and Pressure Decay Test

The built-in restriction and pressure decay test sequentially checks for restrictions and leaks in the sampling system. The test checks for:

- Restrictions in the sample probe
- Restrictions in the sample loop
- Restrictions in the vent line
- Leaks in the Pneumatic Control Module (PCM) and valves
- Leaks around the six port valve and sample probe
- Leaks around the six port valve and sample loop

The test consists of several parts. If one part fails, the test reports the failure and stops before attempting any subsequent parts.

If the test fails, the display provides:

- The reading for the stage that failed (for example, leak rate or flow rate).
- Command lines to toggle related valves (for example, a switching valve or the six port valve):

  SV1, **SV2**, **PV1**, or **PV2**: Scroll to this line and press [**On/Yes**] to turn on (energize) the valve, or [**Off/No**] to turn it off.

  Six-port valve: Scroll to this line and press [**On/Yes**] to switch the valve to the load position, or [**Off/No**] to switch it to the inject position.
- A selection to exit the test:

  Exit test?: Select this line then press [**On/Yes**] to abort the test.

Correct the problem, then re-run the test. Continue correcting problems and retesting until the test completes successfully.

Before running the built-in leak check, check the GC for leaks. See "Leak Check General Procedure" on page 2 and the GC user documentation.

1. Gather the following:
   - Leak test kit (G4556-67010). Includes: six port valve cap (G6600-80039), no hole ferrule (5181-7458), blue leak test vial (G4556-20600), 1/8-inch Nylon Swagelok plug (0100-2414)
   - 3/16-inch wrench
   - 7/16-inch wrench
   - 1/4-inch wrench
   - 5/16-inch wrench
2. Set the active headspace method vial size to 20 mL. Press [**Vial**], scroll to **Vial size**, press [**Mode/Type**] to select the vial size from a list, then press [**Enter**].

3 Install a new septum into the blue leak test vial.

4 Place the blue leak test vial into priority position 1 (111 vial model) or into tray position 1 (12 vial model). If performing the test on the 111 vial model, make sure the tray is unparked.

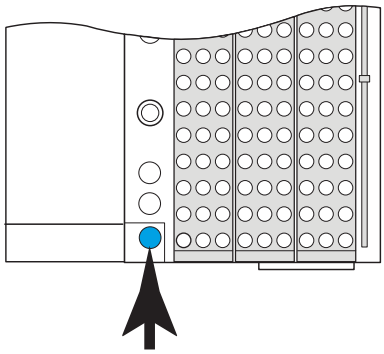

G4557A

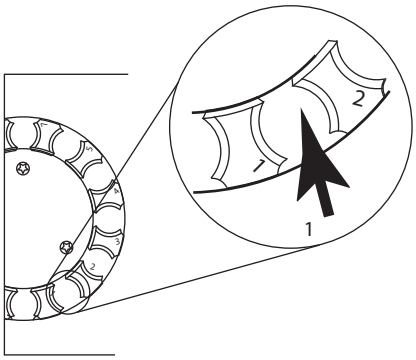

G4556A

5 Set the carrier pressure on the HS or GC inlet pressure to a low value. This will prevent a false pass result in case there is a leak across the 6 port valve.

If using HS Control or GC Control:

a Cool the GC inlet and column oven.

b When cool, press [**Carrier**] on the HS or [**Inlet**] on the GC.

c Set the carrier pressure setpoint to 14 kPa (2 psi). (If in a flow mode, reduce the flow setpoint until the carrier pressure is below 14 kPa (2 psi).)

If using GC + HS Control:

- Set the GC carrier pressure to 2 psi or change the column flow to get the carrier pressure at 2 psi when the GC is under flow control mode.
- Press [**Carrier**], then reduce the flow setpoint until the carrier pressure is 2 psi.

6 Start the test. Press [**Service Mode**], select **Restriction & pressure decay**, then press [**Enter**].

The test begins with three restriction tests that are performed very quickly, so pay attention to the HS screen. In case the test fails you can refer to the diagrams below for troubleshooting. The sequence of the restriction tests are:

Needle (Sample Probe) Restriction Test Stage 1 Vent Closed (Inject)

Needle (Sample Probe) Restriction Test Stage 2 Vent Closed (Standby)

Needle (Sample Probe) Restriction Test Stage 3 Vent Open

If the pressure reading in the restriction test is greater than 0.37 psi to start when the valve/loop temperature is at 40 °C, suspect that there is a restriction in the system, and refer to the diagrams below to identify where the problem is.

If the pressure reading in the restriction tests is always close to 0, there is most likely a leak in the system which is resulting in no restriction (there should always be a little restriction).

Needle (Sample Probe) restriction test, stage 1: Vent CLOSED (INJECT)

The instrument expects a value less than 0.37 psi for stage 1 of the restriction test when the valve/loop temperature is at 40 °C. The value is temperature dependent - the higher the temperature, the higher the pressure. If the value is higher than this then there is a restriction. If this stage fails because the value is high, the most suspect parts are the sample probe and pneumatics flow block weldment.

During this stage, the HS flow paths are as shown in Figure 2.

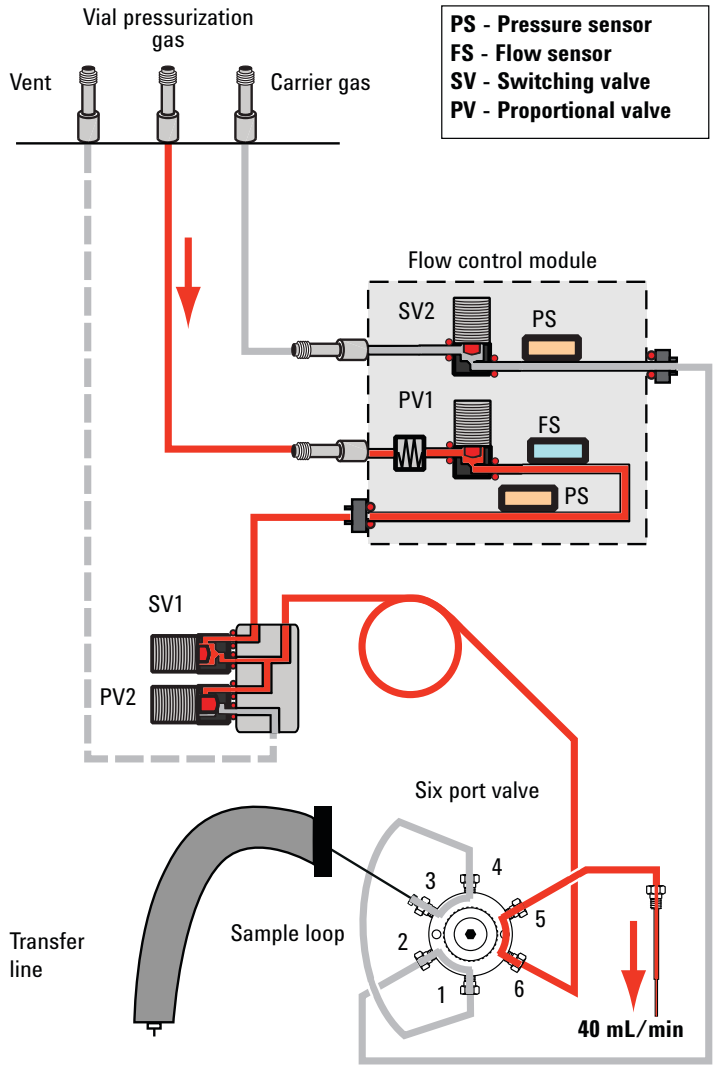

The solenoid valve (SV2) in the PCM AUX channel was replaced with the Jumper Block (part number G4352-67100) from August 2012.

Figure 2 Flow paths: Needle restriction test, stage 1: Vent CLOSED (INJECT)

In this stage, the displayed pressure reading should stabilize at some value. This is your baseline value. If the test fails this stage, check:

- The sample probe (G4556-60125)
- The pneumatics flow block weldment (G4556-64030)
- The gas type and verify it agrees with what is configured

Needle (Sample Probe) restriction test, stage 2: Vent CLOSED (STANDBY)

The instrument expects a pressure increase for stage 2 of the restriction test. This is because the six port valve has changed positions and the sample loop is in line. There is added volume in the system. The amount of pressure increase depends on the sample loop size. If the first stage of the test passes and this stage fails, suspect that the sample loop size is configured incorrectly, there is a restriction in the sample loop or there is a leak in the 6 port valve. To determine if the issue is a restriction or a leak, note the pressure change between stage 1 and stage 2 of the test. If the value increased, suspect an issue with the sample loop configuration or sample loop. If the value decreased, suspect a leak in the sample loop connections of the six port valve.

During this stage, the HS flow paths are as shown in Figure 3.

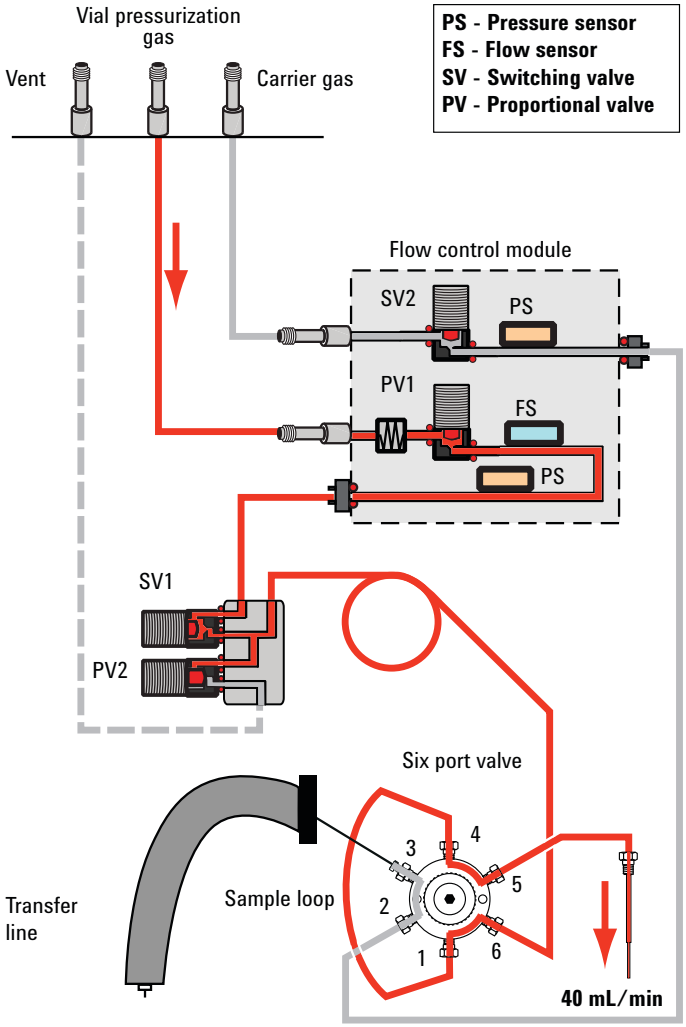

The solenoid valve (SV2) in the PCM AUX channel was replaced with the Jumper Block (part number G4352-67100) from August 2012.

Figure 3 Flow paths: Needle restriction test, stage 2: Vent CLOSED (STANDBY)

In this stage, the pressure should stabilize at a higher value than in stage 1. The value will be dependent on the sample loop size. If the test fails this stage, check:

- The sample loop or sample loop configuration. The part number for the 1 mL sample loop is G4556-80106. For other sample loop part numbers, refer to the Headspace supplies catalog or Parts finder.
- The six port valve (0101-0584)
- A leak causing no restriction value

Needle (Sample Probe) restriction test, stage 3: Vent OPEN

Finally, the instrument expects a pressure drop in stage 3 of the restriction test. This is because the vent valve has opened so there should be almost no restriction in the system. If the first two stages of the restriction test passed and this one failed, suspect a problem with the vent valve or vent line.

During this stage, the HS flow paths are as shown in Figure 4.

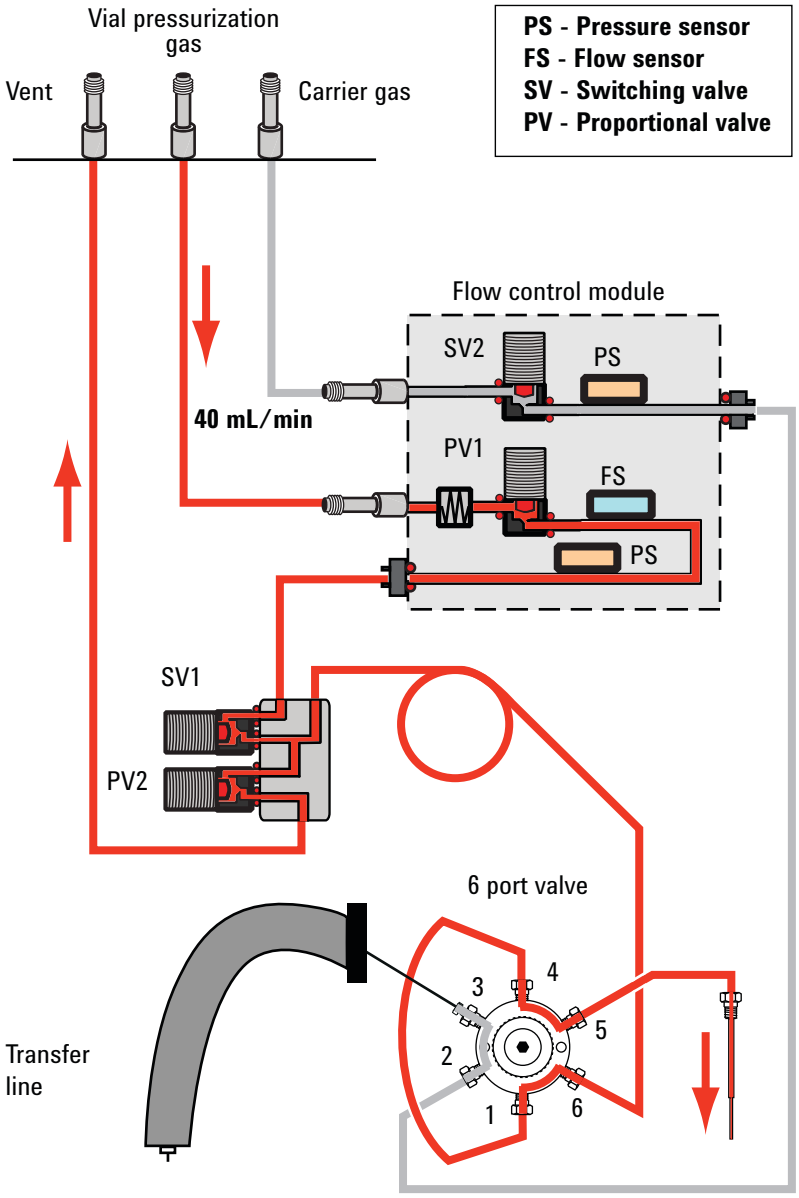

The solenoid valve (SV2) in the PCM AUX channel was replaced with the Jumper Block (part number G4352-67100) from August 2012.

Figure 4 Flow paths: Needle restriction test, stage 3: Vent OPEN

In this stage, the pressure should drop to a very low value since the vent is open. If the test fails this stage, check:

- The vent line (contact Agilent for service, G4556-64030)
- The vent valve (G4556-60121)
- A leak causing no restriction value
- An external vent line connected to the instrument vent. If using an external vent line, disconnect it from the instrument and rerun the test.

If the restriction tests pass, the instrument will load the blue leak test vial to perform the pressure decay tests. There are three pressure decay tests that are performed. Watch the display. If the test fails, refer to the diagram below to help identify where the source of the issue is.

Vial leak test, stage 1: Test up to SV1

During this stage, the HS flow paths are as shown in Figure 5.

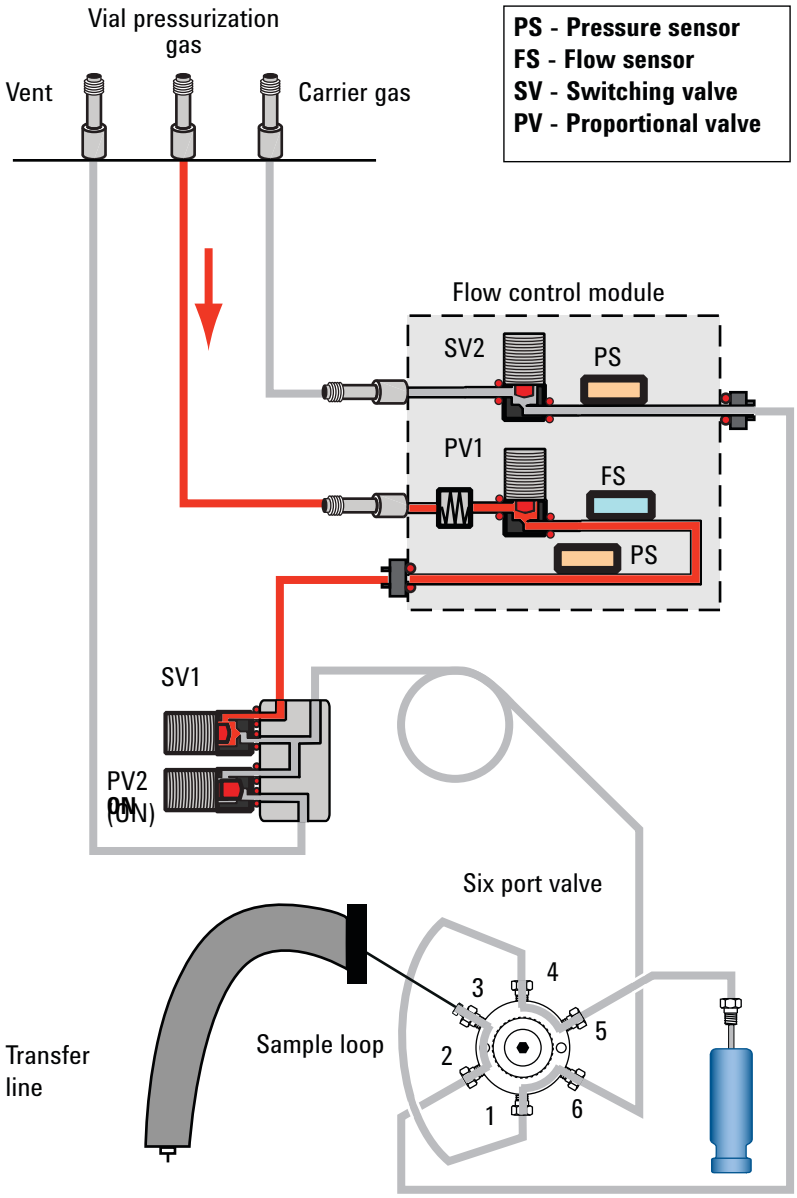

The solenoid valve (SV2) in the PCM AUX channel was replaced with the Jumper Block (part number G4352-67100) from August 2012.

Figure 5 Flow paths: Vial leak test, stage 1: Test up to SV1

If the test fails this stage, check:

- SV1, the pressurization valve (contact Agilent for service, G4556-60095)
- The O-ring seats on the PCM module connection (contact Agilent for service, PCM G4556-67067, PCM O-rings 0905-1626)

Vial leak test, stage 2: Test 6PORT (STANDBY)

During this stage, the HS flow paths are as shown in Figure 6.

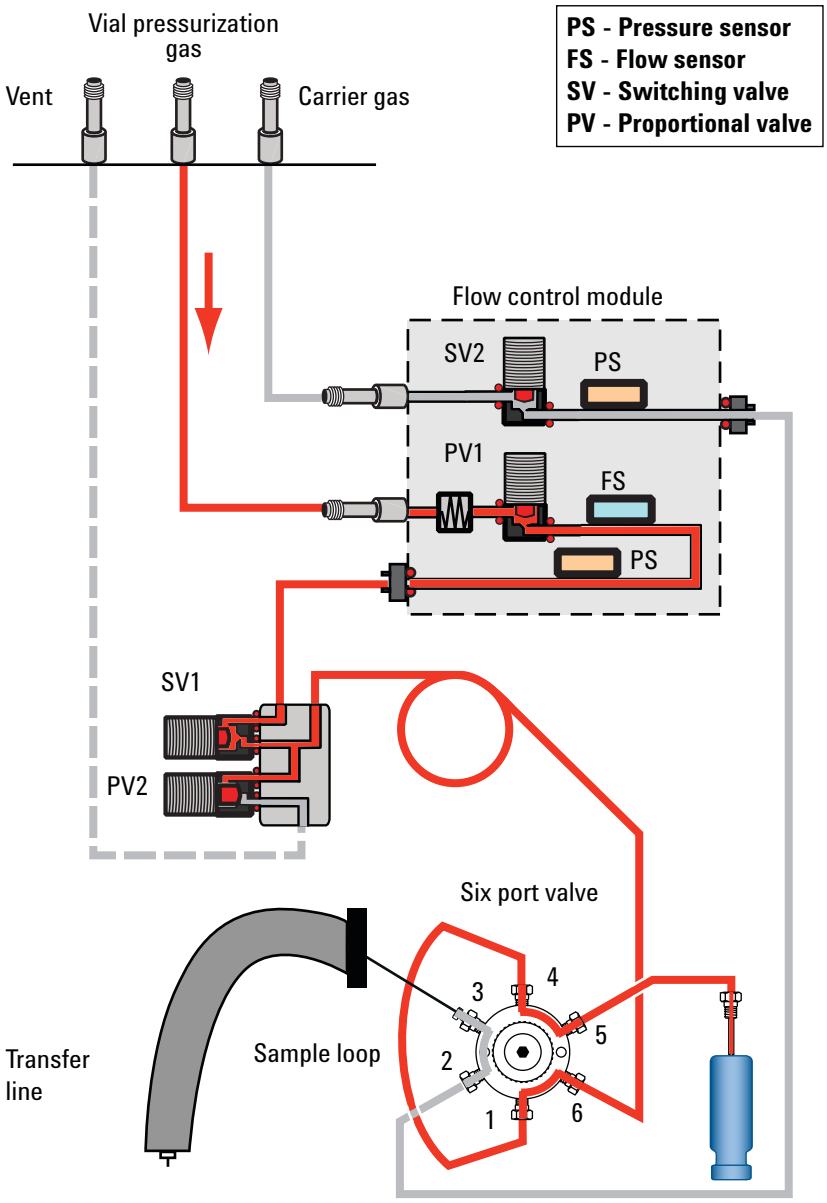

The solenoid valve (SV2) in the PCM AUX channel was replaced with the Jumper Block (part number G4352-67100) from August 2012.

Figure 6 Flow paths: Vial leak test, stage 2: Test 6PORT (STANDBY)

If the test fails this stage, check:

- That the septum is fully inserted into the blue leak test vial. If the system does not hold pressure, it is possible that the probe is not really capped with the septum in the blue leak test vial.

- The vent valve. Cap the exit on the vent line and retest. If the test passes, contact Agilent for a vent valve, G4556-60121 and valve O-rings, 0905-1723. If the test fails again, the vent valve is operating properly and the problem is somewhere else. It could be:
  - The sample probe connections to the six port valve. The sample probe part number is G4556-60125.
  - The sample loop connections to the six port valve. The part number for the 1 mL sample loop is G4556-80106. For other sample loop part numbers, refer to the Headspace supplies catalog or Parts finder.
  - Port 6 on the six port valve. The six port valve part number is 0101-0584.

Vial leak test, stage 3: Test 6PORT (INJECT)

During this stage, the HS flow paths are as shown in Figure 7.

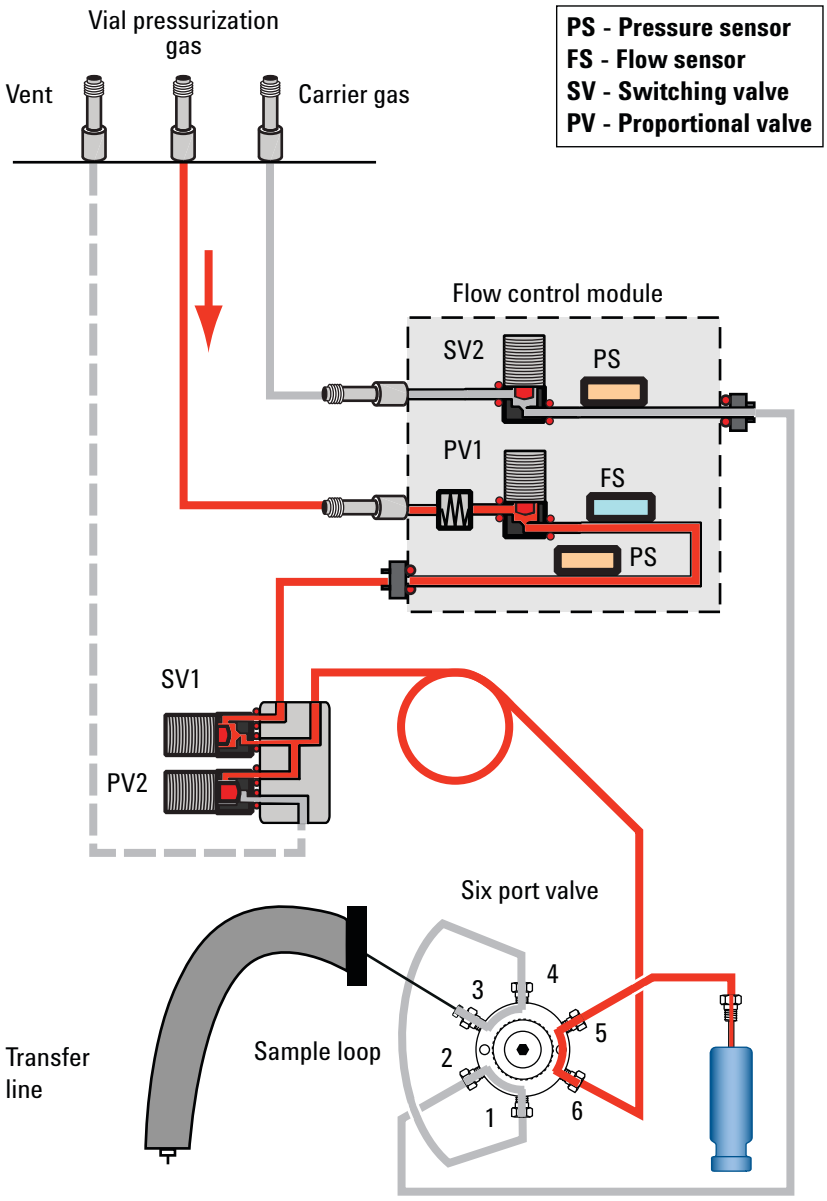

The solenoid valve (SV2) in the PCM AUX channel was replaced with the Jumper Block (part number G4352-67100) from August 2012.

Figure 7 Flow paths: Vial leak test, stage 3: Test 6PORT (INJECT)

If the test fails this stage, check:

- The sample probe connections to the six port valve. The sample probe part number is G4556-60125.
- Port 6 on the six port valve. The six port valve part number is 0101-0584.

To Run the Cross Port Leak Test

Run the cross port leak test immediately after the HS passes the restriction and pressure decay test. See "To Run the Restriction and Pressure Decay Test" on page 6. These instructions assume that the HS is already prepared and that the GC is leak-free.

The built-in leak test sequentially checks for leaks across the six port valve, from the carrier side to the vial pressurization side.

The test consists of two parts. If one part fails, the test reports the failure and stops before attempting any subsequent parts. Correct the problem, then re-run the test. Continue correcting problems and retesting until the test completes successfully.

1 Install a new septum into the blue leak test vial.

2 Place the blue leak test vial into priority position 1 (111 vial model) or into tray position 1 (12 vial model).

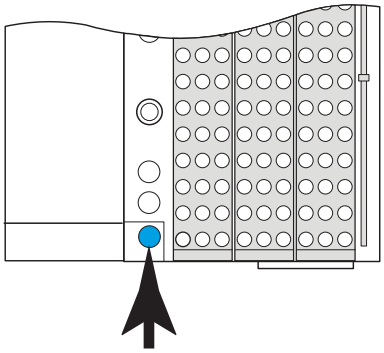

G4557A

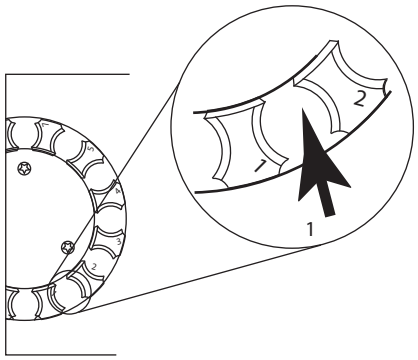

G4556A

3 Set the HS carrier or GC inlet pressure to 172 kPa (25 psi).

If using GC + HS Control:

- Set the GC carrier pressure to 25 psi or change the column flow to get the carrier pressure at 25 psi when the GC is under flow control mode.
- Press [**Carrier**], then reduce the flow setpoint until the carrier pressure is 25 psi.

4 Start the test. Press [**Service Mode**], select **Cross port leak test**, and then press [**Enter**].

The test begins.

The test displays information for the current activity (for example, venting or moving the test vial, and the pressure and calculated leak rates).

To stop the test, press [**Clear**] during a purge step (monitor the HS display). Otherwise, the test continues until it passes or fails.

See "If the test passes" or "If the test fails".

5 After the test passes, restore the instrument to operating condition.

If the test passes

If the test passes all stages, the sampling system is leak free. If still experiencing leak-like symptoms:

- Check the transfer line.
- Check the interface to the GC.
- If not already done, check the GC. The HS leak test cannot test for leaks in the GC.

If the test fails

If the test fails, the display provides:

- The reading for the stage that failed (for example, leak rate or flow rate).
- Command lines to toggle related valves (for example, a switching valve or the six port valve).

  SV1, **SV2**, **PV1**, or **PV2**: Scroll to this line and press [**On/Yes**] to turn on (energize) the valve, or [**Off/No**] to turn it off.

  Six-port valve: Scroll to this line and press [**On/Yes**] to switch the valve to the load position, or [**Off/No**] to switch it to the inject position.
- A selection to exit the test.

  Exit test?: Select this line then press [**On/Yes**] to abort the test.
- A failure code

See the sections below for troubleshooting information for each stage of the test.

Cross port leak test, stage 1: Test 6PORT (STANDBY)

During this stage, the HS flow paths are as shown in Figure 8.

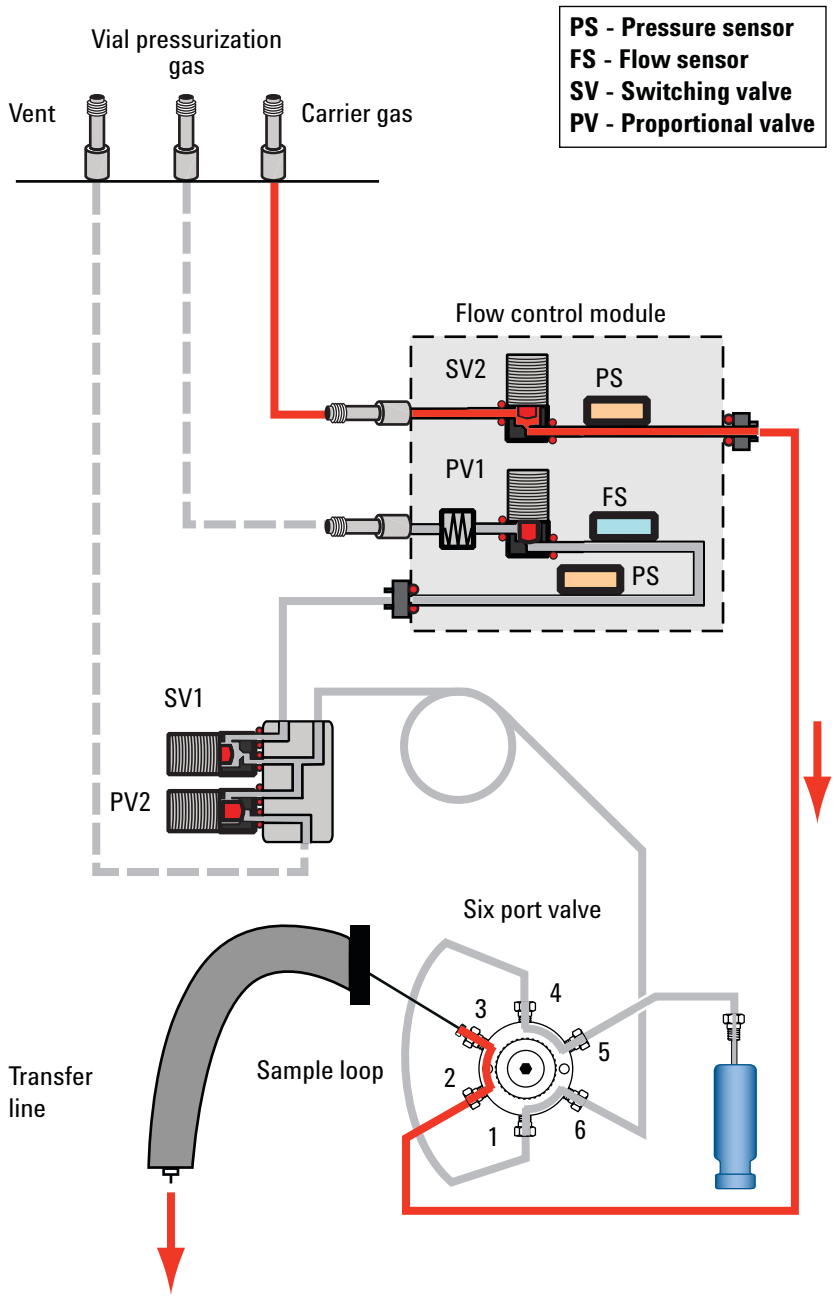

The solenoid valve (SV2) in the PCM AUX channel was replaced with the Jumper Block (part number G4352-67100) from August 2012.

Figure 8 Flow paths: Cross port leak test, stage 1: Test 6PORT (STANDBY)

If the test fails this stage, check:

- A leak across six port valve ports 3 and 4, or 1 and 2. Replace the valve rotor.

Cross port leak test, stage 2: Test 6PORT (INJECT)

During this stage, the HS flow paths are as shown in Figure 9.

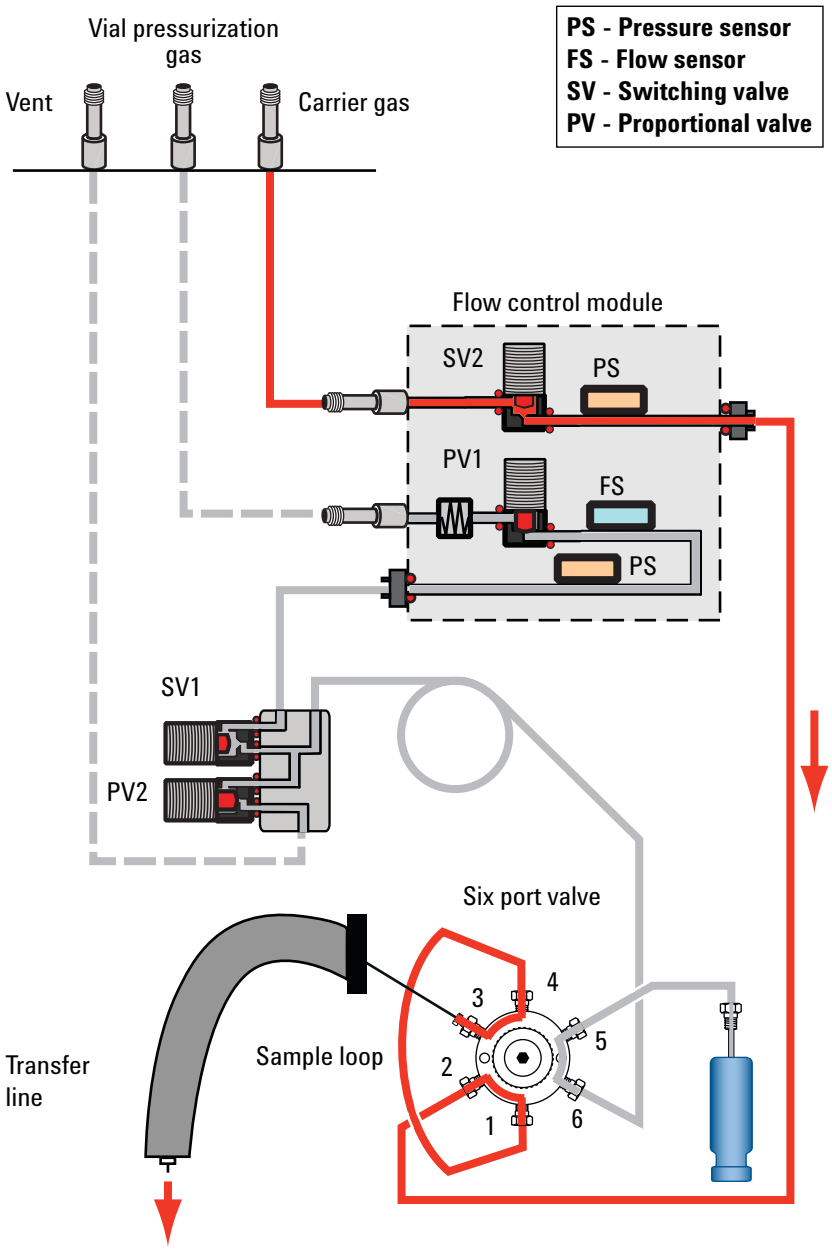

The solenoid valve (SV2) in the PCM AUX channel was replaced with the Jumper Block (part number G4352-67100) from August 2012.

Figure 9 Flow paths: Cross port leak test, stage 2: Test 6PORT (INJECT)

If the test fails this stage, check:

- A leak across six port valve ports 4 and 5, or 1 and 6. Replace the valve rotor.

If the test passes

If the test passes all stages, the sampling system is leak free. If still experiencing leak-like symptoms:

- Check the transfer line.
- Check the interface to the GC.
- If not already done, check the GC. The HS leak test cannot test for leaks in the GC.

To Check for Leaks in the Transfer Line

- Check for leaks at the six port valve and interface connection to the GC.
- Check for flow out of the transfer line fused silica. No flow indicates broken fused silica.
- Also consider other leaks in the GC inlet (liner, O-ring, septum and so forth).

Agilent Technologies

Warranty

The material contained in this document is provided "as is," and is subject to being changed, without notice, in future editions. Further, to the maximum extent permitted by applicable law, Agilent disclaims all warranties, either express or implied, with regard to this manual and any information contained herein, including but not limited to the implied warranties of merchantability and fitness for a particular purpose. Agilent shall not be liable for errors or for incidental or consequential damages in connection with the furnishing, use, or performance of this document or of any information contained herein. Should Agilent and the user have a separate written agreement with warranty terms covering the material in this document that conflict with these terms, the warranty terms in the separate agreement shall control.

Printed in USA and China

Fourth edition, March 2015
Agilent Technologies, Inc.
2850 Centerville Road
Wilmington, DE 19808-1610 USA

安捷伦科技 （上海）有限公司
上海市浦东新区外高桥保税区
英伦路 412 号
联系电话：（800）820 3278

G4556-90001