Agilent G4234A/B Valve Kit

Instructions

Contents

Agilent Technologies

Typical Applications of the G4234A/B Valve Kit

Multi Column Selection

Advantages:

- Increase productivity
- Higher instrument up-time

Quickly change between up to four different stationary phases for different applications, or use identical stationary phases in columns with different dimensions for either faster run-times (short columns) or higher resolution (long columns) or for loading studies with different internal diameters.

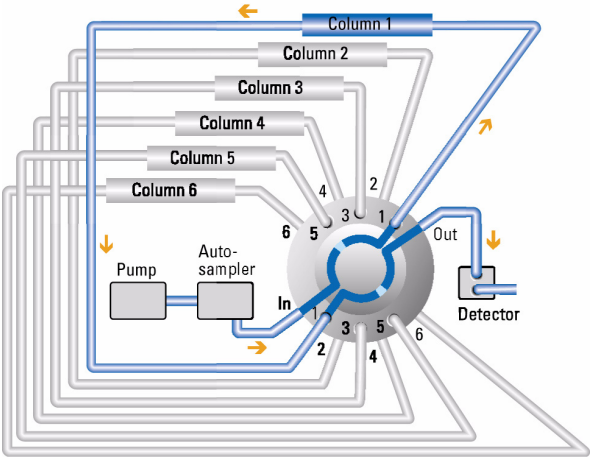

Figure 1 Multiple column selection (example of schematic setup for 6 column selector)

Method Development

Advantages:

- Faster method development
- Automated method development possible

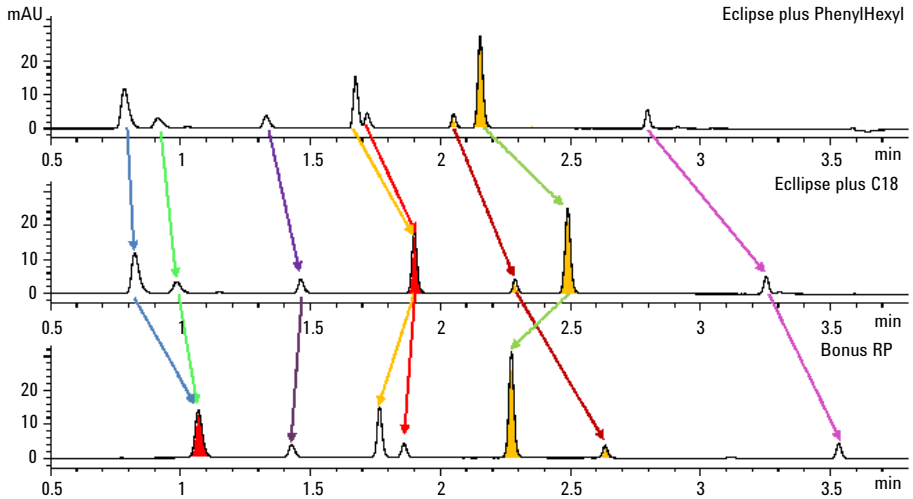

Figure 2 Totally different chromatographic results by using the same sample but three different stationary phases

Delivery Checklist (G4234A/B)

Delivery Checklist:

p/n	Description
5067-4146	Valve head 6 column selector (600 bar) G4234A
5067-4142	Valve head 6 column selector (1200 bar) G4234B
5067-6187	6-Column Selection Capillary Kit 0.12 mm ID, G1316C (OPTIONAL)
5067-4234	Capillary Kit 0.17 mm ID (OPTIONAL)

Capillary Kit (5067-6187):

#	p/n	Description
2	G1316-60005	LD-Pre-Column Heatexchanger Double-Assy Order part number G1316-80022 for re-order
4	5500-1188	Capillary ST 0.12 mm x 105 mm Heatexchanger to column
12	G7167-68703	Fitting Intermediate Kit Use 8x with cap 5500-1188, 4x on cap 5500-1200 to heat exchanger
1	G1316-90123	Technical Note (*Installation of the Low Dispersion Heat-Exchanger Double Assemblies in the 1290 Series Thermostatted Column Compartment (G1316C)*, ENG)
8	5500-1200	Capillary SST 0.12x130mm M4 PS-NS LS valve to heat exchanger / column to valve
1	5063-6591	PEEK Fittings 10/PK Column outlet fitting for capillary 5500-1200
1	5067-4737	Capillary ST 0.17 mm x 150 mm M/M Valve to valve (bypass)*
1	5067-4744	Capillary ST 0.12 mm x 340 mm SL/M Autosampler to valve*
1	5500-1202	Capillary SST 0.12x500mm M4-SL PS-PS Autosampler (dual stack) to valve
1	5500-1203	Capillary SST 0.12x280mm M4-SL PS-PS valve to detector
1	5042-9918	Column clip set, 8 colors
1	5023-2504	Hex driver SW-4 slitted
1	G1375-87326	Waste tube Valve to waste
2	5067-6141	M4 Blank nut for plugging unused valve ports
1	G4234-90004	Technical Note G4234 TCC LDHE Double

* Fittings: Removable fitting = connect to Column, Heat Exchanger; Metric M4 fitting = always connect to Valve Ports

Capillary kit (5067-4234):

#	p/n	Description
1	5067-6188	Capillary ST 0.17 mm x 500 mm SL-M4 PS-PS Autosampler to TCC heater
2	5067-5113	Capillary ST 0.17 mm x 250 mm SL/M Heater to valve, valve to detector
4	5067-5112	Capillary ST 0.17 mm x 280 mm SV/M Valve to column
4	5067-5111	Capillary ST 0.17 mm x 150 mm SV/M Column to valve
1	5067-4737	Capillary ST 0.17 mm x 150 mm M/M Valve to valve (bypass)*
1	G1375-87326	Waste tube
1	5023-2504	Hex driver SW-4 slitted
1	5042-9918	Column clip set, eight colors
2	5067-6141	M4 Blank nut for plugging unused valve ports

Specifications (G4234A/B)

Table 1 G4234A, 6-position/14-port valve head, 600 bar

Type	Specification
Liquid contacts	Stainless Steel, PEEK
Maximum pressure	600 bar

Table 2 G4234B, 6-position/14-port valve head, 1200 bar

Type	Specification
Liquid contacts	Stainless Steel, Vespel
Maximum pressure	1200 bar

Installing the Valve Heads

The valve drives are factory-installed in the 1290 Infinity Thermostatted Column Compartment , in the 1290 Infinity Flexible Cube, and in the 1290 Infinity Universal Valve Drive. The valve heads are interchangeable and can be easily mounted.

At the first installation, the transportation lock (TCC only) and the dummy valve have to be removed, see "Removing the transportation lock and the valve dummy (only if used with TCC)" on page 7. The valve heads can be installed by mounting the valve heads onto the valve drives and fastening the nut manually (do not use any tools).

Be sure that the guide pin snaps into the groove of the valve drive thread.

NOTE

TCC only:

The valves are mounted on pull-out rails to allow easy installation of capillaries. Push the valve gently into its housing until it snaps into the inner position, push it again and it slides out.

If all capillaries are installed, push the valve back into its housing, see section *Installing the Valve Head and Connecting Capillaries* in the TCC-Manual.

Removing the transportation lock and the valve dummy (only if used with TCC)

The following procedure demonstrates the necessary steps for installing the valve head to the valve drive of a TCC.

For the installation of a valve head to a G1170A 1290 Infinity Valve Drive or G4227A 1290 Infinity Flexible Cube you can ignore the steps that describe the TCC features of the transportation lock and spring loaded valve drive.

1 When unscrewing the transportation lock (TCC only), push it back until the last screw is removed - the valve rail is spring-loaded

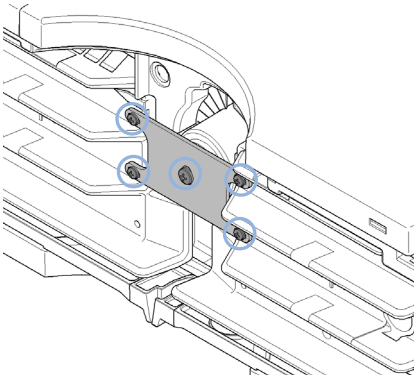

2 To remove the valve dummy, loosen the nut manually.

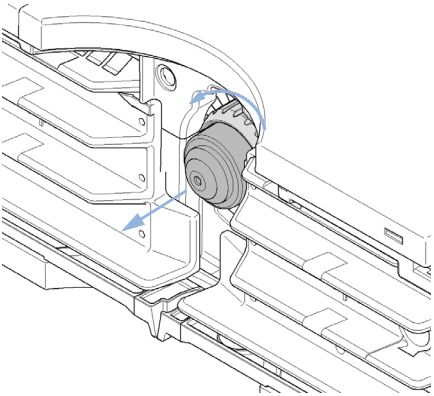

Installing the valve head and connecting capillaries (with the TCC as an example)

BIO inert For bio-inert modules use bio-inert parts only!

CAUTION

The valve actuator contains sensitive optical parts, which need to be protected from dust and other pollutions. Pollution of these parts can impair the accurate selection of valve ports and therefore bias measurement results.

→ Always install a valve head for operation and storage. For protecting the actuator, a dummy valve head can be used instead of a functional valve. Do not touch parts inside the actuator.

CAUTION

Column Damage or Bias Measurement Results

Switching the valve to a wrong position can damage the column or bias measurement results.

→ Fit the lobe to the groove to make sure the valve is switched to the correct position.

CAUTION

Valve Damage

Using a low pressure valve on the high pressure side can damage the valve.

→ When using multiple column compartments as part of a method development solution, make sure that the high pressure valve head is connected to the autosampler and the low pressure valve head is connected to the detector.

CAUTION

Sample degradation and contamination of the instrument

Metal parts in the flow path can interact with the bio-molecules in the sample leading to sample degradation and contamination.

- ➔ For bio-inert applications, always use dedicated bio-inert parts, which can be identified by the bio-inert symbol or other markers described in this manual.
- ➔ Do not mix bio-inert and non-inert modules or parts in a bio-inert system.

NOTE

The tag reader reads the valve head properties from the valve head RFID tag during the initialization of the module. The valve properties will not be updated if the valve head is replaced while the module is on. Selection of valve port positions can fail if the instrument does not know the properties of the installed valve.

NOTE

The Agilent 1290 Infinity Valve Drive recognizes the valve correctly, only if the valve drive was powered off for at least 10 s.

NOTE

For a correct installation of the valve head, the outside pin (red) must completely fit into the outside groove on the valve drive's shaft (red). A correct installation is only possible if the two pins (green and blue) on the valve head fit into their corresponding grooves on the valve drive's actuator axis. Their match depends on the diameter of the pin and groove.

The following procedure demonstrates the necessary steps for installing the valve head to the valve drive of a TCC. For the installation of a valve head to a 1290 Infinity Valve Drive or 1290 Infinity Flexible Cube, you can ignore the steps that describe the TCC features of the spring loaded valve drive.

1 Insert the valve head into the valve shaft.

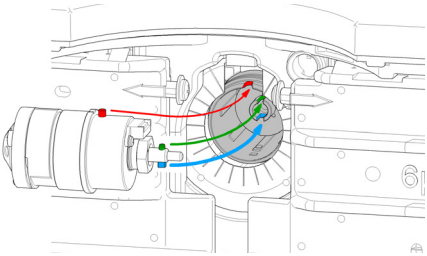

OR

If the outside pin does not fit into the outside groove, you have to turn the valve head until you feel that the two pins snap into the grooves. Now you should feel additional resistance from the valve drive while continue turning the valve head until the pin fits into the groove.

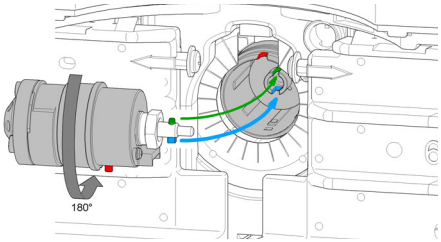

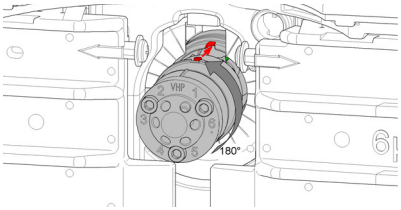

2 When the outer pin is locked into the groove, manually screw the nut onto the valve head.

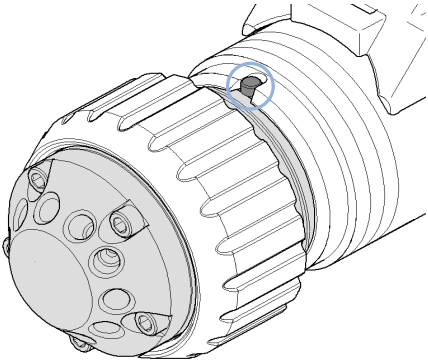

NOTE

Fasten the nut manually. Do not use any tools.

3 Install all required capillary connections to the valve.

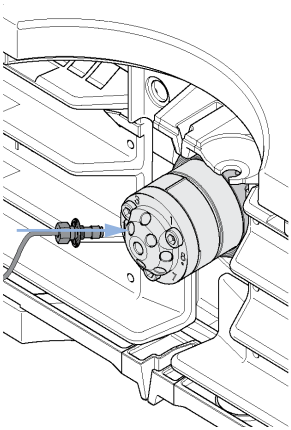

4 Push the valve head until it snaps in and stays in the rear position. (TCC only)

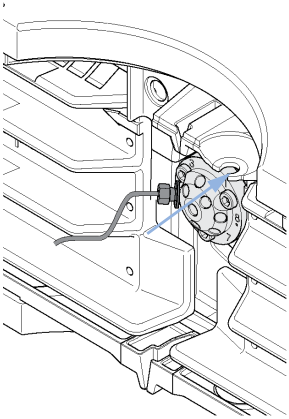

5 Power on or power-cycle your module, so the valve head gets recognized during module initialization.

NOTE

Power Off the Infinity valve drive for at least 10 s.

Connecting Valves, Heat Exchanger and Columns

Installation of the Low Dispersion Heat-Exchanger Double Assemblies

The device is typically mounted into the center location of either the left or the right heater element where it can support two columns.

The additional heater can be arranged in the G1316C in various locations depending on the application needs. Some examples are shown in Figure 3 on page 13.

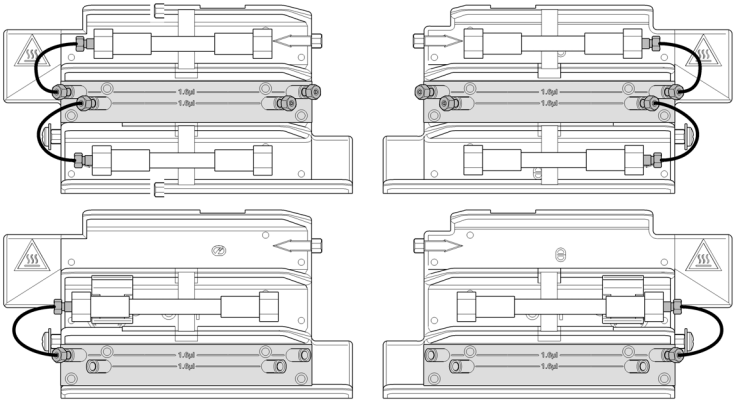

Figure 3 Arrangements of Heater and Cooling Devices (G1316C)

NOTE If the additional heater and cooling devices are used as shown in Figure 3 on page 13 (top), the column identification system cannot be used. If the column identification system is required, fix the heater and cooling devices in the upper or lower locations or fix them right/left of the current location.

NOTE The maximum flow rate to be used with the Low Dispersion Heatexchangers is 2.5 mL/min at 100 °C and 100 °C ambient.

Delivery Checklist:

Item	#	p/n	Description
1	1		Low Dispersion Heat Exchanger Double Assembly Incl. 3 screws for mounting
2	2	5500-1188	Capillary ST 0.12 mm x 105 mm Connection Heat Exchanger to Column
3	1	G1314-68703	Cap fitting kit special Heat Exchanger Outlet Port and Column Inlet Port (alternative fittings shown below)

Tools Required:

p/n	Description
8710-2412	Hex key 2.5 mm, 15 cm long, straight handle Required for fixing the Low Dispersion Heat Exchanger to the Heater Assembly
5023-0240	Hex driver, ¼", slitted Recommended for tightening the fitting nuts

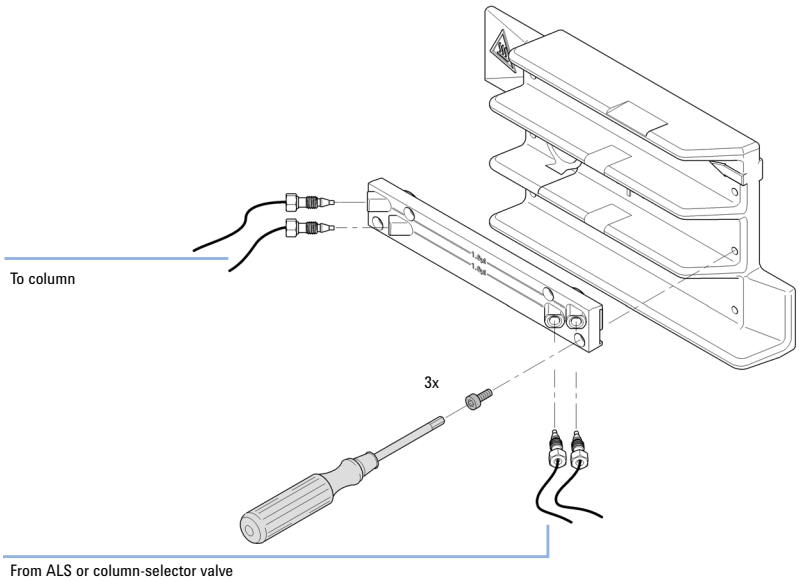

Figure 4 Fixing Heater or Cooling Devices (G1316C)

Install the Capillaries

1 Install the in and out connectors.

- from sampler to the valve (Capillary SST 0.12x500mm M4-SL PS-PS (5500-1202))
- from valve to the detector (Capillary SST 0.12x280mm M4-SL PS-PS (5500-1203))

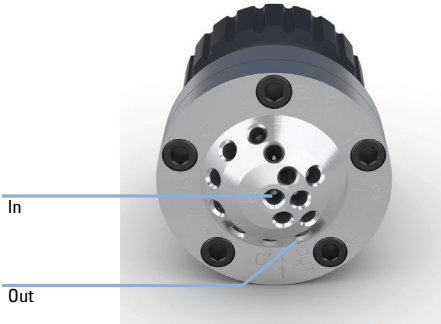

The *In* port is hydraulically connected to the column inlet ports 1-6 on the inner ring while the *Out* port connects to the column outlet ports 1`-6` on the outer ring.

2 Install the column inlet and outlet connections.

●	*ports 1-6* for connections from valve to the heat exchanger (Capillary SST 0.12x130mm M4 PS-NS LS (5500-1200)) or waste line (Waste tube (G1375-87326))
●	*ports 1`-6`* for connections from column outlet to valve (Capillary SST 0.12x130mm M4 PS-NS LS (5500-1200)), use fingertight PEEK fittings for connecting the column outlet

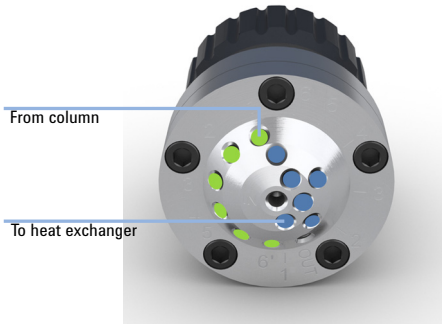

Parts (G4234A/B Valve Kit)

Replacement Parts for the G4234A/B Valve Kit

Table 3 Replacement parts

Valve	Rotor Seal	Stator Head	Stator Screws (pack of 10)	Bearing Ring
5067-4146 6 Column Selector, 600 bar	5068-0076 (PEEK)	5068-0077	5068-0089	1535-4045
5067-4142 6 Column Selector, 1200 bar	5068-0067 (Vespel)	5068-0077	5068-0089	1535-4045

Valve Head Parts for the G4234A/B Valve Kit

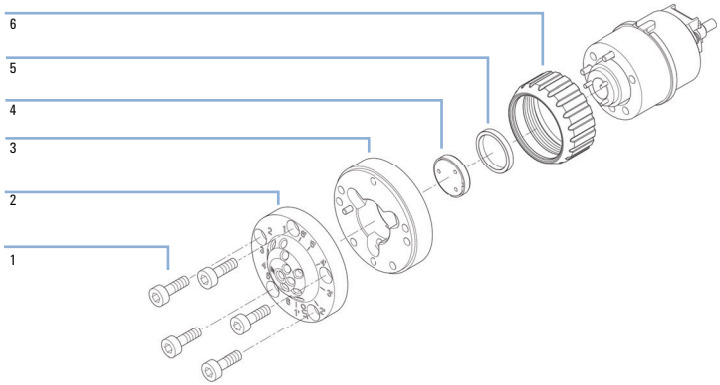

Figure 5 Valve Head Parts (G4234A/B)

1	Stator screws
2	Stator head assembly
3	Stator ring (available for service only
4	Rotor seal
5	Bearing ring
6	Spanner nut (available for service only)

G4234-90004

Part Number:
G4234-90004 Rev.B

Edition: 04/2016
Printed in Germany

Agilent Technologies, Inc
Hewlett-Packard-Strasse 8
76337 Waldbronn, Germany