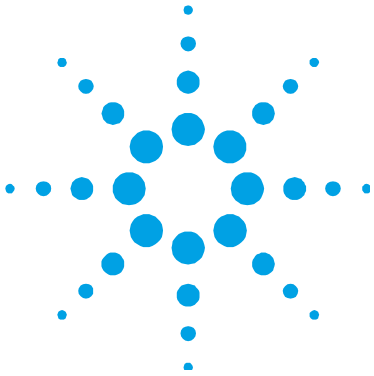

Agilent 700 Series ICP Optical Emission Spectrometers

Site Preparation Guide

Agilent Technologies

Notices

© Agilent Technologies, Inc.
2006 and 2010–2011

No part of this manual may be reproduced in any form or by any means (including electronic storage and retrieval or translation into a foreign language) without prior agreement and written consent from Agilent Technologies, Inc. as governed by United States and international copyright laws.

Manual Part Number

8510233700

Edition

Fifth edition, December 2011

Printed in Australia

Agilent Technologies, Inc.

Warranty

The material contained in this document is provided "as is," and is subject to being changed, without notice, in future editions. Further, to the maximum extent permitted by applicable law, Agilent disclaims all warranties, either express or implied, with regard to this manual and any information contained herein, including but not limited to the implied warranties of merchantability and fitness for a particular purpose. Agilent shall not be liable for errors or for incidental or consequential damages in connection with the furnishing, use, or performance of this document or of any information contained herein. Should Agilent and the user have a separate written agreement with warranty terms covering the material in this document that conflict with these terms, the warranty terms in the separate agreement shall control.

Technology Licenses

The hardware and/or software described in this document are furnished under a license and may be used or copied only in accordance with the terms of such license.

Restricted Rights Legend

If software is for use in the performance of a U.S. Government prime contract or subcontract, Software is delivered and licensed as "Commercial computer software" as defined in DFAR 252.227-7014 (June 1995), or as a "commercial item" as defined in FAR 2.101(a) or as "Restricted computer software" as defined in FAR 52.227-19 (June 1987) or any equivalent agency regulation or contract clause. Use, duplication or disclosure of Software is subject to Agilent Technologies' standard commercial license terms, and non-DOD Departments and Agencies of the U.S. Government will receive no greater than Restricted Rights as defined in FAR 52.227-19(c)(1-2) (June 1987). U.S. Government users will receive no greater than Limited Rights as defined in FAR 52.227-14 (June 1987) or DFAR 252.227-7015 (b)(2) (November 1995), as applicable in any technical data.

Safety Notices

CAUTION

A **CAUTION** notice denotes a hazard. It calls attention to an operating procedure, practice, or the like that, if not correctly performed or adhered to, could result in damage to the product or loss of important data. Do not proceed beyond a **CAUTION** notice until the indicated conditions are fully understood and met.

WARNING

A WARNING notice denotes a hazard. It calls attention to an operating procedure, practice, or the like that, if not correctly performed or adhered to, could result in personal injury or death. Do not proceed beyond a WARNING notice until the indicated conditions are fully understood and met.

Request for Installation

All preparations have been completed. Please arrange for the installation to be completed as soon as possible. I understand that if the installation site is not prepared in accordance with the enclosed instructions, additional installation charges may apply.

Company name: _____

Company address: _____

_____

_____

Name: _____

Position: _____

Telephone: _____

Preferred installation date: _____

Signed: _____

Date: _____

Site Preparation Checklist

Your site must meet all requirements before you request installation. Before unpacking the boxes, complete each requirement listed in the table. After completing each requirement, place a check in the appropriate check box. Ensure you compare each item inside the boxes with the packing list supplied with the boxes.

Requirements	☑
Principal installation area is in compliance with all relevant safety regulations.	☐
Laboratory temperature is maintained between 20 and 25 °C (68 and 77 °F).	☐
Laboratory is free of excessive particulate matter.	☐
Cooling air system is set up (if required).	☐
Workbench requirements are met.	☐
Sufficient bench space is available for all components.	☐
Bench can support system weight.	☐
Personal computer with Microsoft® Windows® XP SP3 or Windows 7 Professional 64-bit SP1 is installed and printer is set up.	☐
Entrance to the lab is at least 2200 cm (86.6 in) wide.	☐
Instrument is unpacked and placed on workbench.	☐
Exhaust system is suitable.	☐
Specified electrical supply and power outlets are installed.	☐
Gas supply (at specified purity), regulator, and gas lines are installed for argon and optional nitrogen.	☐
Water cooling/circulation system and power connections are set up.	☐
Waste container appropriate for the chemical waste is prepared.	☐
Accessories	
SPS Sample Preparation System	☐
SVS 1 Switching Valve System	☐
VGA Vapor Generation Accessory	☐
AGM 1 Auxiliary Gas Module	☐

Contents

Request for Installation 3

Site Preparation Checklist 4

1. Safety Practices and Hazards 9

General 9

Plasma 10

Heat, Vapors and Fumes 11

Compressed Gas Hazards 11

Electrical Hazards 12

Other Precautions 12

Warning Symbols 14

Color Coding 16

CE Compliance 16

Electromagnetic Compatibility 17

EN55011/CISPR11 17

ICES/NMB-001 18

2. Introduction 19

Installation Guidelines 20

3. Laboratory Environment 21

Environmental Conditions 21

Temperature Control 22

Cleanliness 22

Instrument Cooling Air Supply 23
Workbench 24
Location 25
PC Requirements 27
Recommended PC Configuration 27
GPIB Communications 28
Telediagnostics 28

4. Instrument Shipping Information 29

In-house Transit Routes 29
Insurance after Delivery 30
Weights and Dimensions 31
Transit Damage 33
Unpacking the Instrument 33

5. Laboratory Facilities 37

Exhaust System 37
Agilent Exhaust System 39
Electrical Power Supplies 42
Electrical Requirements 43
Spectrometer Power Connections 44
Two or Three Phase System Requirement 44
IEEE 488 44
Fuses 45
Gas Supplies 45
Storage Cylinder Instructions 47

Water Cooling System 48
Location 50
Waste Fluid Container 51
Guidelines for Software Installation 52

6. Accessories and Options 53

Organic Solvents or Hydrofluoric Acid 53
Auxiliary Gas Module 54
Gas Requirements 54
Cooled Spraychamber Organics Kit 55
Sample Preparation System (SPS 3) 56
Environmental Conditions 56
Vapor Generation Accessory Recommended Gases 56
SVS 1 Switching Valve System Accessory 57

This page is intentionally left blank.

1. Safety Practices and Hazards

General	9
Plasma	10
Heat, Vapors and Fumes	11
Compressed Gas Hazards	11
Electrical Hazards	12
Other Precautions	12
Warning Symbols	14
Color Coding	16
CE Compliance	16
Electromagnetic Compatibility	17

General

Operation of an Agilent 710/715/720/725/730/735 ICP Optical Emission Spectrometer involves the use of compressed gases, high voltage radio frequency energy and hazardous materials including corrosive fluids and flammable liquids. Careless, improper or unskilled use of this spectrometer can cause death or serious injury to personnel, and/or severe damage to equipment and property. Only trained personnel should use this instrument.

The spectrometer incorporates interlocks and covers that are designed to prevent inadvertent contact with any potential hazards. If the instrument is used in any manner not specified by Agilent, this protection may be impaired. It is good practice to develop safe working habits that do not depend upon the correct operation of the interlocks for safe operation. It is essential that no interlock or cover is bypassed, damaged or removed.

The safety practices described below are provided to help the user operate the instrument safely. Read each safety topic thoroughly before attempting to operate the instrument and *always* operate the spectrometer in accordance with these safety practices.

Plasma

The plasma is extremely hot (about 10,000 K) and radiates dangerous levels of radio frequency (RF) and ultraviolet (UV) energy. The work coil operates at 1,500 V RMS and about 40 MHz. Exposure to the RF and UV energy can cause severe skin damage and cataracts of the eyes, while close contact with the operating plasma can result in severe heat burns to the skin, and an electrical discharge that can jump a considerable distance and may cause death, severe electric shock or sub-surface skin burns.

The plasma must *never* be operated unless:

- the torch compartment door is closed, with the locking lever fully latched; and
- the space above the chimney is clear of objects.

The shielding around the torch compartment is designed to reduce UV, visible and RF radiation to safe levels while still permitting easy access to, as well as installation and viewing of, the torch. The spectrometer has an interlock system that is designed to extinguish the plasma if either the mains supply fails or the handle on the torch compartment door is opened. *Do not* attempt to bypass the interlock system.

Before opening the torch compartment door, *always* extinguish the plasma by pressing F4 on the keyboard or by clicking the ‘Plasma Off’ icon on the ICP Expert II software toolbar.

The torch and its surroundings remain hot for up to five minutes after the plasma is extinguished. Touching this area before it has cooled sufficiently may result in burns. Allow the torch and torch compartment to cool before carrying out any work in this area, or wear heat-resistant gloves.

The plasma system has been carefully designed to operate safely and effectively when using torches and related components that conform to Agilent's design criteria. Use of non-approved components in the plasma compartment may render the system inoperative and/or hazardous. It may also invalidate the warranty on the instrument. Use only torches and related components supplied or authorized by Agilent.

Heat, Vapors and Fumes

Heat, ozone, vapors and fumes generated by the plasma can be hazardous, and must be extracted from the instrument by means of an exhaust system. Ensure that an exhaust system of the appropriate type is fitted (see Page 39). The system must be vented to the outside air in accordance with local regulations and never within the building. Regularly check the exhaust system by smoke test to ensure that the exhaust system is functioning correctly. The exhaust fan must always be switched on *before* igniting the plasma.

Compressed Gas Hazards

All compressed gases (other than air) can create a hazard if they leak into the atmosphere. Even small leaks in gas supply systems can be dangerous. Any leak (except that of air) can result in an oxygen-deficient atmosphere, which can cause asphyxiation. The area in which cylinders are stored and the area surrounding the instrument must be adequately ventilated to prevent such gas accumulations.

Gas cylinders must be stored and handled strictly in accordance with local safety codes and regulations. Cylinders must be used and stored only in a vertical position and secured to an immovable structure or a properly constructed cylinder stand. Move cylinders only by securing them to a properly constructed trolley.

Use only approved regulator and hose connectors (refer to the gas supplier's instructions). Keep gas cylinders cool and properly labeled. (All cylinders are fitted with a pressure relief device that will rupture and empty the cylinder if the internal pressure is raised above the safe limit by excessive temperatures.) Ensure that you have the correct cylinder before connecting it to the instrument.

The primary gas to be used with the spectrometer is argon, which is the conductive gas for the plasma. Argon or nitrogen can be used as the polychromator purge gas. Other gases may be required for future options and accessories. Use only 'instrument grade' gases with your spectrometer.

If using cryogenic gases (for example, liquid argon), prevent severe burns by wearing suitable protective clothing and gloves.

Electrical Hazards

The spectrometer system and some accessories contain electrical circuits, devices and components operating at dangerous voltages. Contact with these circuits, devices and components can cause death, serious injury or painful electric shock. Panels or covers which are retained by screws on the spectrometer and accessories may be opened *only* by Agilent-trained, Agilent-qualified or Agilent-approved field service engineers (unless specified otherwise). Consult the manuals or product labels supplied with your personal computer (PC), monitor, printer and water-cooling system to determine which parts are operator-accessible.

Replace blown fuses with ones of the size and rating shown in the text near to the fuse holder.

Other Precautions

Use of the spectrometer system and accessories may involve materials, solvents and solutions which are flammable, corrosive, toxic or otherwise hazardous. Careless, improper or unskilled use of such materials, solvents and solutions can create explosion hazards, fire hazards, toxicity and other hazards that can result in death, serious personal injury or damage to equipment.

Operation of an ICP-OES involves analysis of solutions that have been prepared in or digested with acids, or in some cases, samples that have been prepared in organic solvents.

The acid concentrations in the sample that is measured is variable, depending upon the digestion steps and acid types used. Instrument users should be aware of the hazards associated with use of the acids used for sample preparation and apply all necessary precautions including use of lab coats, safety goggles and other appropriate forms of personal protection. The acid wastes should be disposed of in accordance with local regulatory requirements.

The type, volatility and concentration of the organic solvents used in the sample that is measured is variable, depending upon the selected solvent and the sample preparation involved. Instrument users should be aware of the hazards associated with use of the organic solvents used for sample preparation, and apply all necessary precautions including ensuring adequate ventilation during use, and use of lab coats, safety goggles and other appropriate forms of personal protection. The organic wastes should be disposed of in accordance with local regulatory requirements.

Air flow to the cooling fans of the spectrometer and accessories must be unobstructed. Do not block the ventilation grills on the spectrometer and accessories. Consult the manuals supplied with your PC, monitor, printer and water-cooling system for their specific ventilation requirements.

Great care should be taken when working with glass or quartz parts to prevent breakage and cuts. This is especially important when attaching plastic tubing to glass barbs, or removing and replacing pieces of broken torch or bonnet.

The spectrometer weighs approximately 203 kg (448 lb). To avoid injury to personnel or damage to the instrument or property, always use a forklift or other suitable mechanical lifting device to move the instrument.

Use only Agilent-supplied spares with your instrument.

Warning Symbols

The following is a list of symbols that appear in conjunction with warnings on the spectrometer. The hazard they describe is also shown. The beginning of the warning text is noted by a warning icon:

WARNING

A triangular symbol indicates a warning. The meanings of the symbols that may appear alongside warnings in the documentation or on the instrument itself are as follows:

Broken glass

Corrosive liquids

Electrical shock

Extreme cold hazard

Eye hazard

Fire hazard

Heavy weight (danger to feet)

Heavy weight (danger to hands)

Hot surface

Noxious gases

RF radiation

The following symbol may be used on warning labels attached to the instrument. When you see this symbol, refer to the relevant operation or service manual for the correct procedure referred to by that warning label.

The following symbols appear on the instrument for your information.

	Mains power on
	Mains power off
	Fuse
	Single phase alternating current
	Direct current
	When attached to the rear of the instrument, indicates that the product complies with the requirements of one or more EU directives.
	'Out' position of a bi-stable push switch.
	'In' position of a bi-stable push switch.
	Plasma on
	Plasma off
	'On' for part of equipment.
	'Off' for part of equipment.
	When attached to the rear of the product, indicates that the product has been certified (evaluated) to CSA 61010.1 and UL 61010-1.

Color Coding

The various indicator lights appearing on Agilent instruments and associated accessories are color coded to represent the status of the instrument or accessory.

- A green light indicates the instrument is in normal/standby mode.
- An orange light indicates that a potential hazard is present.
- A blue light indicates that operator intervention is required.
- A red light warns of danger or an emergency.

CE Compliance

Your Agilent 700 Series ICP-OES instrument has been designed to comply with the requirements of the Electromagnetic Compatibility (EMC) Directive and the Low Voltage (electrical safety) Directive (commonly referred to as the LVD) of the European Union. Agilent has confirmed that each product complies with the relevant Directives by testing a prototype against the prescribed EN (European Norm) standards.

Proof that a product complies with these directives is indicated by:

- the CE Marking appearing on the rear of the product, and
- the documentation package that accompanies the product containing a copy of the Declaration of Conformity. The Declaration of Conformity is the legal declaration by Agilent that the product complies with the directives listed above, and shows the EN standards to which the product was tested to demonstrate compliance.

Electromagnetic Compatibility

EN55011/CISPR11

Group 1 ISM equipment: group 1 contains all ISM equipment in which there is intentionally generated and/or used conductively coupled radio- frequency energy which is necessary for the internal functioning of the equipment itself.

Class A equipment is equipment suitable for use in all establishments other than domestic and those directly connected to a low voltage power supply network which supplies buildings used for domestic purposes.

This device complies with the requirements of CISPR11, Group 1, Class A as radiation professional equipment. Therefore, there may be potential difficulties in ensuring electromagnetic compatibility in other environments, due to conducted as well as radiated disturbances.

Operation is subject to the following two conditions:

1. This device may not cause harmful interference.
2. This device must accept any interference received, including interference that may cause undesired operation.

If this equipment does cause harmful interference to radio or television reception, which can be determined by turning the equipment off and on, the user is encouraged to try one or more of the following measures:

1. Relocate the radio or antenna.
2. Move the device away from the radio or television.
3. Plug the device into a different electrical outlet, so that the device and the radio or television are on separate electrical circuits.
4. Make sure that all peripheral devices are also certified.

5 Make sure that appropriate cables are used to connect the device to peripheral equipment.

6 Consult your equipment dealer, Agilent Technologies, or an experienced technician for assistance.

7 Changes or modifications not expressly approved by Agilent Technologies could void the user's authority to operate the equipment.

ICES/NMB-001

This ISM device complies with Canadian ICES- 001.

Cet appareil ISM est conforme à la norme NMB-001 du Canada.

☑ After all safety regulations have been met, check the checklist box: *Principal installation area is in compliance with all relevant safety regulations.*

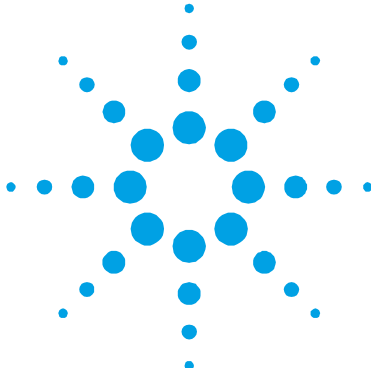

2. Introduction

Installation Guidelines 20

This publication contains the information required to successfully prepare a site for an Agilent 700 Series Inductively Coupled Plasma Optical Emission Spectrometer system installation.

On completion of the site preparation, fill in the checklist on Page 4, (striking out those entries not applicable), and send this checklist to your local Agilent agent or Agilent sales and service office. As soon as it is received, Agilent or its agent will contact you to arrange a convenient time for installation.

References to the Agilent 700 Series ICP-OES are applicable to all models (Agilent 710, 715, 720, 725, 730 and 735 ICP-OES) unless otherwise stated.

References to the Agilent 7X0 Series ICP-OES are applicable to the Agilent 7X0 and Agilent 7X5 ICP-OES instrument models, where X = 1, 2 or 3. For example, reference to the Agilent 710 Series ICP-OES is applicable to both the Agilent 710 and Agilent 715 ICP-OES instrument models.

If you have difficulty in preparing for the installation, and for details of operator training courses, please contact your Agilent sales or field service representative.

Installation Guidelines

Allow a minimum of one day for the installation of the Agilent 700 Series ICP-OES system by an Agilent field service engineer.

The installation will include the following:

- Spectrometer installation
- Water cooler connection
- Instrument software installation and registration
- Accessory installation
- Spectrometer installation performance tests
- Basic customer training
- Maintenance overview

3. Laboratory Environment

Environmental Conditions 21
Temperature Control 22
Cleanliness 22
Instrument Cooling Air Supply 23
Workbench 24
Location 25
PC Requirements 27
Recommended PC Configuration 27
GPIB Communications 28
Telediagnostics 28

Environmental Conditions

The instrument is suitable *only* for indoor use and is classified suitable under the following categories (EN 61010-1):

- Installation category II
- Pollution degree 2
- Equipment class I

Table 1. Suitable environmental conditions for the Agilent 700 Series ICP-OES instruments

Condition	Altitude	Temp. (°C)	Humidity (%RH) non-condensing
Non-operating (Transport)	0–3,050 m (0-10,000 ft)	5–45	20–80
Operating within specifications	0–3,050 m (0-10,000 ft)	20–25	8–80

Temperature Control

Air-conditioning is strongly recommended for control of the environment.

NOTE For *optimum analytical performance*, it is recommended that the ambient temperature of the laboratory be between 20 and 25 °C (68 and 77 °F).and be held constant to within ±2 °C (±3.6 °F) throughout the entire working day.

Most of the 3,650 watts (joules per second) or 13,140 kilojoules per hour (12,455 BTU per hour).generated by the system is vented outside the laboratory by the exhaust system.

The water cooler generates approximately 1,000 watts (joules per second), or 3,600 kilojoules per hour (3,412 BTU per hour).

Total load with both the water cooler and Agilent 700 Series ICP-OES in the same room can be up to 4,650 watts or 16,740 kilojoules per hour (15,867 BTU per hour).

☑ After the temperature requirements have been met, check the checklist box: *Lab temperature maintained between 20 and 25 °C.*

Cleanliness

The area selected for the operation of an Agilent 700 Series ICP-OES system *must be free from drafts, corrosive atmospheres and vibration* and should be a dust-free, low humidity environment**.**

Sample preparation areas and materials storage facilities should be located in a separate room.

Limit dust levels to less than 36,000,000 particles (0.5 microns or larger) per cubic meter of air. This is equivalent to a very clean office.

☑ After the cleanliness requirements have been met, check the checklist box: *Laboratory is free of excessive particulate matter.*

Instrument Cooling Air Supply

The Agilent 700 Series ICP-OES instrument requires *clean, dry, non-corrosive air for cooling purposes*. This is supplied to the instrument through an air supply vent located at the top, rear of the instrument. The vent is fitted with a dust filter, to filter out particulate matter from the surrounding environment.

The air supply is used to cool the RF generator and the electronics of the instrument. Several of these assemblies contain parts prone to corrosion. The introduction of cooling air contaminated with high levels of acid vapor or other corrosive substances may cause damage to the instrument.

Due to the corrosive nature of some analytical work, it is recommended that in applications demanding high usage of corrosive materials, an external cooling air supply system be provided. It is *strongly recommended* that the cooling air be supplied from an environmentally controlled area that is away from the instrument exhaust and any other area where corrosive materials are stored or used.

The cooling air system with flue, fan, ducting and supply cowl, must provide a minimum positive flow of 6 cubic meters per minute (200 ft^3/min). The ducting should be corrosion resistant and fire-proof.

NOTE If an external cooling air supply system is required, an air inlet duct attachment must be ordered with the instrument.

☑ After the instrument cooling air supply requirements have been met, check the checklist box: *Cooling air system is set up.*

Workbench

The Agilent 700 Series ICP-OES is a precision optical instrument. The workbench must be free from vibration and must be stable and strong enough to support the total weight of the equipment to be placed on top of the workbench. The bench top should be large enough to permit free circulation of air through the main instrument and around each of the accessories.

The information provided in the weights and dimensions table will help make planning easier. Portable or semi-permanent trolleys can be used as workbenches for the spectrometer system, but you must *lock* the wheels. Accessories such as the Sample Preparation System (SPS) Autosampler, PC and printer can be positioned on a trolley. A specially designed SPS trolley is available from Agilent.

To avoid damage through spillage of samples being used, the instrument bench top should be covered with a material that is corrosion-resistant and impervious to liquid spillage. Generally, for comfortable working conditions and easy access to the instrument sample introduction system, Agilent recommends that the height of the workbench be approximately 900 mm (36 in) high. Refer to Figure 1.

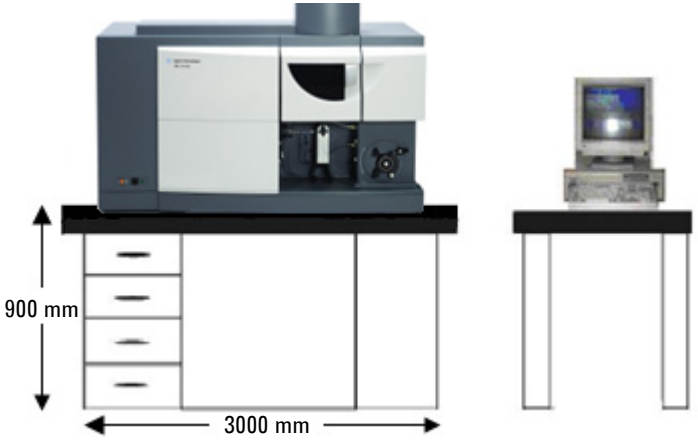

Figure 1. Instrument workbench

Location

The workbench location should permit service access from all sides. A minimum of 400 mm (16 in) free space at the sides of the spectrometer and approximately 750 mm (30 in) at the rear of the instrument is required for maintenance and service access. Leave enough space in front of the instrument to provide easy access to the mains power on/off switch at all times.

The Agilent 700 Series ICP-OES system should not be located close to an access door, window or any other area where drafts may cause unstable temperature conditions.

The following diagrams show the relative dimensions of the main instrument including the space needed for service access. These dimensions should be considered during the preparation for installation of your spectrometer.

The location of the workbench may be determined by the need for an exhaust flue to remove fumes and vapors from the spectrometer sample compartment (see Section 4).

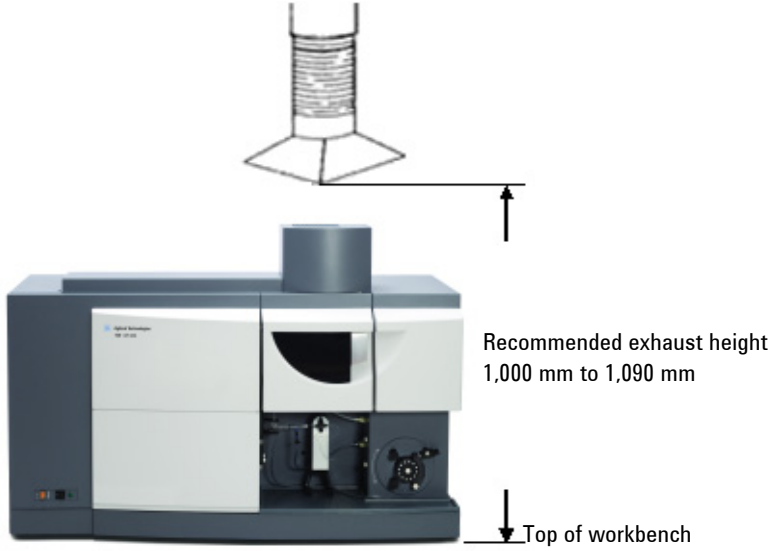

Figure 2. Front view of instrument

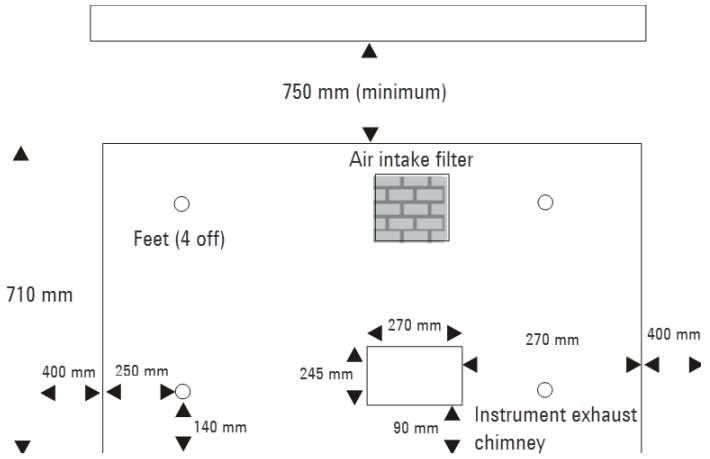

Figure 3. Top view of instrument

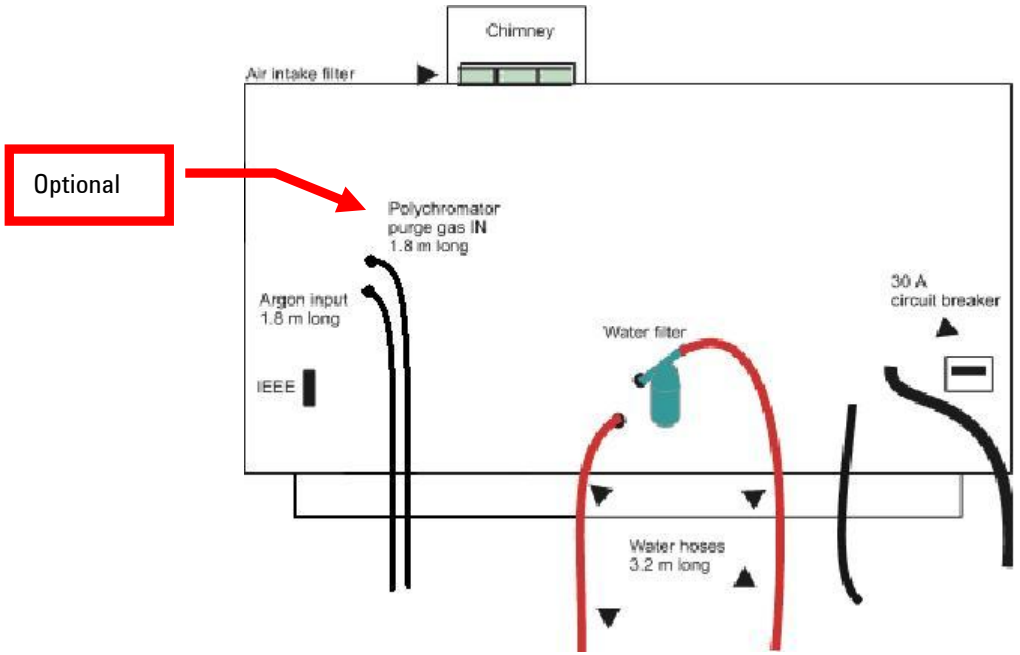

Figure 4. Rear view of instrument

☑ After the workbench vibration and location requirements have been met, check the checklist box: *Workbench requirements met.*

☑ After the bench space requirements have been met, check the checklist box: *Sufficient bench space is available for all components.*

☑ After the bench support requirements have been met, check the checklist box: *Bench can support system weight. See Page 31 for Weight and Dimension information.*

PC Requirements

If you are supplying your own personal computer (PC) for use with an Agilent 700 Series instrument, the recommended configuration is shown.

Recommended PC Configuration

- IBM compatible PC with Quad-core 2.66 GHz processor
- 2 GB RAM
- 500 GB Hard disk drive
- 256 MB Graphics card supporting 1024 x 768 resolution
- 16 speed DVD drive
- Integrated audio/sound card and speakers
- Serial port
- Keyboard and Mouse
- 19 in LCD monitor
- Windows 7 Professional 64-bit (Service Pack 1) system

NOTE The PC must have one spare full height PCI expansion slot for the I/O card.

PCs supplied with Letter of Credit orders will be an international brand and will be the 'Recommended' configuration or better.

Higher rated PC components can be substituted for those listed above for example, processor type, amount of memory, screen size and resolution and operating system version.

GPIB Communications

The Agilent 700 Series ICP-OES systems require a PCI-GPIB card or USB-GPIB-HS converter to be fitted in the PC. A National Instruments PCI-GPIB card will be included in your instrument order. Alternatively, you can purchase the USB-GPIB-HS converter. Contact your Agilent representative for more information.

The Agilent service engineer will install the GPIB communications device in your PC. If you are supplying your own PC, you will need to install it yourself (refer to the instrument user's guide, supplied with the instrument, for GPIB communications device installation instructions).

☑ After the computer requirements have been met, check the checklist box: *Computer requirements met.*

Telediagnostics

In order to make use of Telediagnostics, it is recommended that a separate telephone line is installed for connection to a modem.

A modem and Agilent Telediagnostics kit provides remote diagnostic capabilities. Service engineers can operate all instrument functions remotely and spend less time troubleshooting onsite. By using Telediagnostics, problems can be determined over the phone and parts ordered in advance of the engineer arriving at the site, reducing downtime.

Contact your local Agilent sales and service office to inquire about whether this service is available in your area.

4. Instrument Shipping Information

In-house Transit Routes	29
Insurance after Delivery	30
Weights and Dimensions	31
Transit Damage	33
Unpacking the Instrument	33

Generally, Agilent 700 Series ICP-OES instruments are sold as 'Free On Board' to the shipping point, with the transportation from this point at the customer's expense. Due to the size and nature of the spectrometer, it is advisable that a third party is engaged to assist with transportation from the point of unloading to the final placement of the instrument in the laboratory. The Agilent field Sales and Service Offices will be able to assist in the task of recommending a third party that specializes in the transportation of precision scientific instrumentation.

NOTE The Agilent field service engineer cannot start the installation until the instrument is situated on the intended workbench.

In-house Transit Routes

In-house transit routes must be carefully considered. Vertical, horizontal and turning clearances should be calculated from the shipping crate dimensions of the spectrometer, which is the largest unit in any system arrangement.

Figure 5 provides an indication of the minimum turning clearance and minimum door width required for the spectrometer in its shipping crate.

Particular attention should be made to the clearance of any doors in the transit route to the laboratory. The required turning and door clearance may need to take into consideration any lifting device used for transporting the instrument (for example, fork lift, pallet truck or trolley).

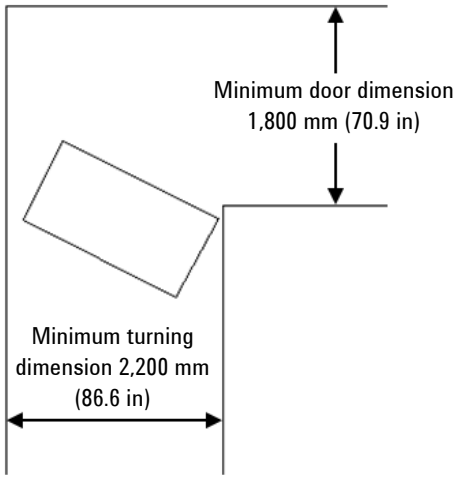

Figure 5. Maximum clearance required for transportation in the shipping crate

☑ After the in-house transit route requirements have been met, check the checklist box: *Entrance to the lab is at least 2,200 cm (86.6 in) wide.*

Insurance after Delivery

As the carrier's liability ceases when the equipment is delivered, Agilent recommends that the instrument owner arranges separate insurance that will cover transportation from the delivery point to the installation site. The delivery point will vary according to the carrier, the shipping method, and in some cases the terms of sale. Some carriers will only deliver to their own distribution center, while others may deliver to the actual installation site.

Weights and Dimensions

Table 2. Weights and dimensions

System unit	Width	Depth	Height	Weight
Agilent 700 Series ICP-OES instrument	1,375 mm 54.5 in	750 mm 29.5 in	990 mm 39 in	203 kg 448 lb
Shipping dimensions	1,660 mm 65.5 in	960 mm 37.8 in	1,420 mm 56 in	285 kg 629 lb
Personal computer (typical)	450 mm 18 in	770 mm 30 in	520 mm 20 in	(N/A)
Printer (typical)	500 mm 18 in	650 mm 30 in	200 mm 20 in	(N/A)
Water cooling system				
Lytron MCS20 G01 and Lytron MCS20 H01 ambient modular cooling systems	439 mm 17.3 in	384 mm 15.1 in	338 mm 13.3 in	16 kg 35 lb
Van der Heijden model 001-RB301 recirculating chiller	430 mm 16.9 in	470 mm 18.5 in	695 mm 27.4 in	54 kg 119 lb
SPS 3	490 mm 19.3 in	285 mm 11.2 in	510 mm 20.1 in	15 kg 33.1 lb
Shipping dimensions	760 mm 29.9 in	500 mm 19.7 in	840 mm 33.1 in	31 kg 68.4 lb
SPS 3 with diluter	572 mm 22.5 in	285 mm 11.2 in	510 mm 20.1 in	18 kg 39.7 lb
Shipping dimensions	760 mm 29.9 in	500 mm 19.7 in	840 mm 33.1 in	34 kg 75.1 lb

Continued overleaf...

System unit	Width	Depth	Height	Weight
SPS trolley	580 mm 23 in	412 mm 17 in	400 mm 16 in	
SVS 1	54 mm 2.1 in	110 mm 4.3 in	177 mm 7.0 in	615 g 1.4 lb
Shipping dimensions	380 mm 15 in	410 mm 16.1 in	265 mm 10.4 in	2 kg 4.4 lb
VGA (including mounting bracket)	385 mm 10 in	340 mm 8 in	195 mm 9 in	6 kg 13.2 lb
Shipping dimensions	490 mm 19.5 in	490 mm 19.5 in	320 mm 12.5 in	10 kg 22 lb
AGM 1 Shipping dimensions	550 mm 22 in	430 mm 17 in	245 mm 9.5 in	
Ultrasonic nebulizer (trolley mounted)	780 mm 31 in	540 mm 21 in	1,150 mm 45 in	

WARNING

Heavy Weight

The Agilent 700 Series ICP-OES weighs approximately 203 kg (448 lb). To avoid injury to personnel or damage to equipment, always use a fork lift or other suitable lifting device when moving the instrument.

Transit Damage

Transit damage can be obvious or concealed, and in either case will only be admitted by the carrier if it is reported as agreed in the terms of their agreement. For any claims against damage in transit, the following general rules apply:

- Before accepting delivery, you should inspect the packages for signs of obvious damage. The nature of any obvious damage must be noted on the carrier's waybill, and then must be countersigned by a representative of the carrier.
- Within the time limits stated in the terms of conditions of carriage, a further inspection must be made for concealed damage. If any damage is found at this stage, the carrier must be notified in writing and all packaging material must be retained for subsequent inspection by a representative of the carrier.
- A copy of any damage report must be forwarded to the Agilent Sales Office dealing with the supply of the equipment.

Agilent 700 Series ICP-OES systems are inherently robust, and the packaging is designed to prevent damage. It must be remembered that the contents form part of a precision measuring system and all packages should be handled accordingly. In transit, sharp jolts and shocks must be avoided and the packages must not be inverted or tilted unnecessarily. Markings on the shipping cartons generally indicate the required orientation of the carton.

Unpacking the Instrument

The following section provides a guide on how to unpack the instrument and place it on the workbench, along with recommendations on equipment required to perform this task. More detailed instructions on unpacking the instrument are supplied with the documentation shipped with the instrument.

NOTE The Agilent field service engineer cannot start the installation until the instrument is finally placed on the intended workbench.

To unpack the instrument:

1. Remove the top wooden cover, which is secured by twelve 1/4 inch bolts.
2. Remove the boxes containing the instrument components.
3. Remove the wood-framed cardboard sides, which are secured by eight 3/18 inch bolts and six 1/4 inch bolts.
4. Remove the plastic wrap and inspect the outside of the instrument for any visible damage.
5. The instrument is held in position by two lengths of square, hollow tubing inserted through hat section brackets welded to the base of the instrument. These square, hollow tubes are secured to the pallet by four 1/2 inch bolts at the base of the shipping crate.
6. To release the instrument from the pallet, remove the four 1/2 inch bolts and plates, and slide the two square hollow tubes out from the hat sections on the instrument.
7. Using a fork lift at the front or rear of the instrument (slide the forks in between the instrument and the top of the shipping pallet), lift the instrument and place it onto the intended workbench.

WARNING

Heavy Weight

The Agilent 700 Series ICP-OES weighs approximately 203 kg (448 lb). To avoid injury to personnel or damage to equipment, always use a fork lift or other suitable lifting device when moving the instrument.

8 Once the instrument is in position on the workbench and the site preparation checklist is complete, contact your Agilent office to arrange installation.

WARNING

Electrical Shock Hazard

To prevent death or personnel injury from accidental contact with high voltages within the instrument, do not remove any of the instrument covers. Do not connect the instrument to the mains supply.

☑ After the instrument is unpacked and on the benchtop, check the checklist box: *Instrument unpacked and placed on the workbench.*

This page is intentionally left blank.

5. Laboratory Facilities

Exhaust System	37
Electrical Power Supplies	42
Electrical Requirements	43
Spectrometer Power Connections	44
Two or Three Phase System Requirement	44
IEEE 488	44
Fuses	45
Gas Supplies	45
Storage Cylinder Instructions	47
Water Cooling System	48
Location	50
Waste Fluid Container	51
Guidelines for Software Installation	52

Exhaust System

The plasma operates at a temperature of approximately 10,000 °C, (18,000 °F) with up to 1,800 watts of RF energy (6,480 kilojoules per hour). Sample compartment exhaust fumes can be noxious or corrosive.

The Agilent 700 Series ICP-OES must be located under a flue that is vented by an exhaust fan and ducted to an external vent. The exhaust system with flue, ducting and external vent must provide a minimum flow of 6 cubic meters per minute (200 ft^3/min).

The exhaust system installation must comply with any rules and/or regulations that may be imposed by the local authorities responsible for control of facilities and fixtures in the work place.

The exhaust fan should be located at least 2 meters (6 feet and 6 inches) away from the top of the instrument chimney. The fan control switch and running indicator lamp should be located in a position where the instrument operator can view the indicator and access the control switch.

Ducting must be corrosion-resistant, fire-proof and should be kept clear of fire alarms, sprinkler heads and other heat sensitive devices.

The external vent must be fitted with a back draft damper and the outlet location must be clear of doors, windows and heater or air-conditioning units.

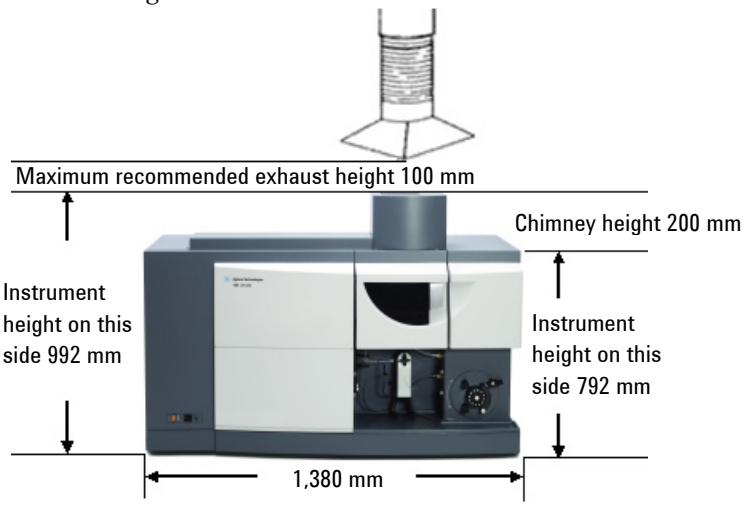

Figure 6. Spectrometer and flue position

Agilent Exhaust System

The component parts required for an exhaust system may be purchased from Agilent. The parts may be ordered individually or in kit form. To allow for personal preferences, control gear, switch and pilot light assemblies are not supplied by Agilent.

Table 3. Agilent exhaust kits

Exhaust kit
Exhaust kit for 240 V, 50 Hz supply
Exhaust kit for 115 V, 60 Hz supply

NOTE Mounting hardware for the flue and fan is not included with the Agilent-supplied Exhaust Kit.

Each Agilent exhaust kit contains the following items, which *must* be installed by local fitters and not the Agilent service engineer.

Table 4. Exhaust kit components (refer to Figure 7)

Item	Remarks	Quantity
1	Exhaust fan (for 240 V, 50 Hz supply only)	1
	Exhaust fan (for 115 V, 60 Hz supply only)	1
2	Flue without mounting brackets	1
3	Flexible ducting 1 meter length, aluminum	3
4	Coupling for joints in ducting	2
5	Ducting clamp two required per coupling	6

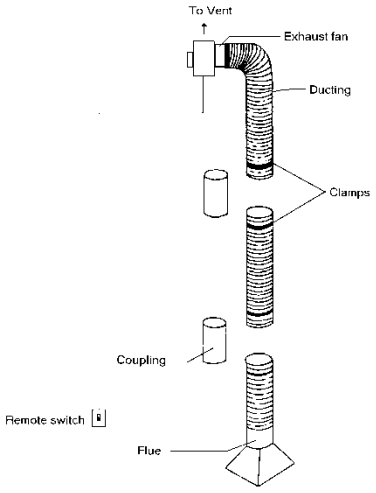

Figure 7. Agilent exhaust kit components

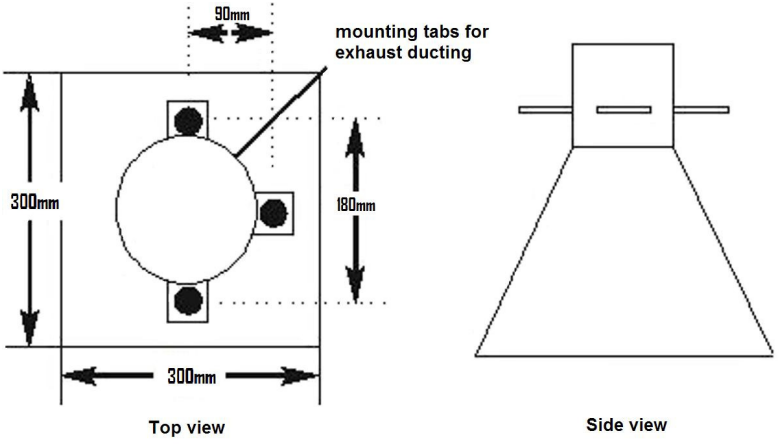

Figure 8. Exhaust ducting details

Agilent Exhaust Fan Electrical Information

Table 5. Exhaust fan motor specifications

Voltage	240 volts single phase	115 volts single phase
Current	0.45 A	0.7 A
Frequency	50 Hz	60 Hz
Power input	74 W	51 W
Direction of rotation	Anti-clockwise (shaft end)	
Nominal RPM	≅ 1600	

Installation instructions for the exhaust fan are included with the Agilent-supplied Exhaust Kit.. Figure 9 details exhaust fan wiring information for the 115 V 60 Hz fan *only*.

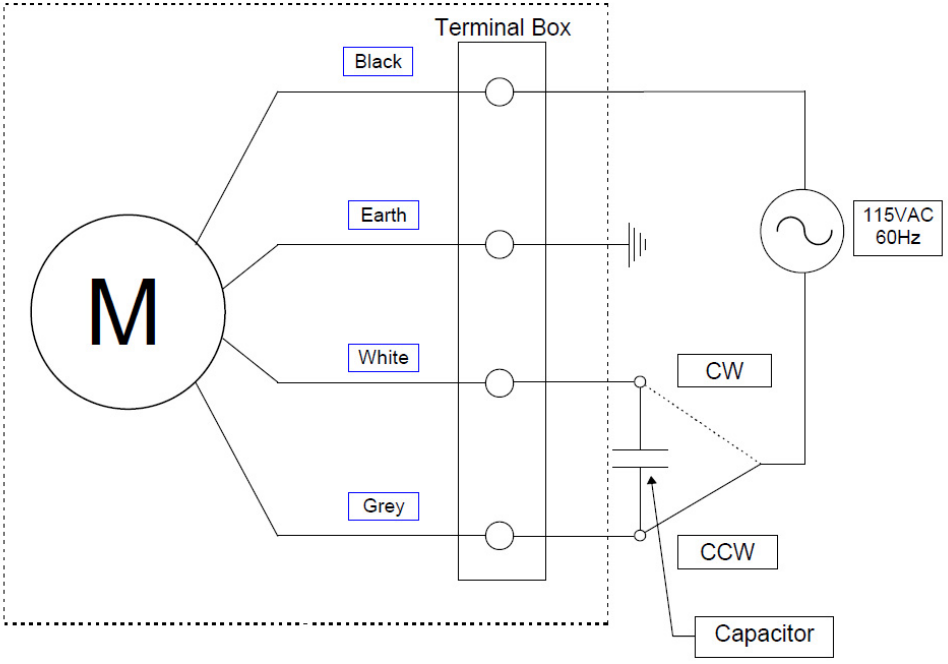

Figure 9. Electrical wiring information for 115 VAC 60 Hz fan only

NOTE The direction of motor rotation (clockwise or counterclockwise) is as viewed from the shaft end of the motor. The exhaust fan rotation is counterclockwise (CCW) and the motor must be wired accordingly.

☑ After the exhaust requirements have been met, check the checklist box: *Exhaust system is suitable.*

Electrical Power Supplies

The installation of electrical power supplies must comply with the rules and/or regulations imposed by the local authorities responsible for the use of electrical energy in the workplace.

All power supplies for the Agilent 700 Series ICP-OES, its accessories and water cooler should be single phase, AC, 3 wire systems (active, neutral, ground; or two active and ground). Each connection should be terminated at an appropriate receptacle within reach of each assembly's power cable. Use of power boards or extension cables is *not* recommended**.**

It is recommended that separate mains circuits, (individually protected by fuses or circuit breakers) are used for each component in the system such as the water cooler, autosampler and printer.

Avoid using power supplies from a source that may be subject to electrical interference from other services (such as large electric motors, elevators, welders and air conditioning units).

The power cable is hardwired to the rear of the instrument.

Local regulations in several European countries do not permit the use of a breakable wall-mounted power supply connection for high current single phase mains supplies. In these areas, the mains power supply to the Agilent 700 Series ICP-OES should be hardwired to the wall.

Electrical Requirements

Table 6. System electrical specifications

System unit	Required supply voltage	Nominal rating
Spectrometer	208 VAC ±10%	5.1 kVA
	220 VAC ±10% Equivalent to 230 VAC +6%, -14%	
	240 VAC ±10% Equivalent to 230 VAC +14%, -6% Frequency 50/60 Hz ±1 Hz	
Water cooler (typical)	220–240 VAC, 50 Hz	1450 VA
	115 VAC, 60 Hz	1645 VA
	Voltage ±10%, Frequency ±1 Hz	
SPS 3 Sample Preparation System	100–240 VAC ±10%, 50–60 ±1 Hz	~220 VA
VGA 77	100 VAC, ±10%	24 VA
	120 VAC, ±10%	
	220 VAC, ±10% Equivalent to 230 VAC +6%, -14%	
	240 VAC, ±10% Equivalent to 230 VAC +14%, -6% Frequency 49–61 Hz	
SVS 1	100–240 VAC, 50–60 Hz	1.5 A

Spectrometer Power Connections

Table 7. Spectrometer power connections

Power supply phase	Single
Cable rating	600 VAC, 30 A, 2 m (6 ft, 6 in) length

	Plug supplied	**Required wall socket**
Australia	250 V 32 A Clipsal 56P332	250 V 32 A Clipsal 56C332
USA	250 V 50 A Hubbell # CS8265C	250 V 50 A Hubbell # CS8269
Europe	Customer-supplied (no plug fitted)	Match selected plug

Two or Three Phase System Requirement

The Agilent 700 Series ICP-OES draws a maximum of 28 amps RMS at 187 volts with a power factor of approximately 0.70. In areas where 208 to 240 VAC single phase power supplies are not available at the required rating, two active phases from a two or three phase system may be used with a 380/415 volt phase-to-phase, to 220 volt single phase step-down transformer.

IEEE 488

NOTE Basic insulation is provided for single fault protection on the IEEE connector.

☑ After the electrical requirements have been met, check the checklist box: *Specified electrical supply and power outlets installed.*

Fuses

1FS1 and 1FS2	T6.3 AH 250 V, IEC 127 sheet 5, 5 x 20 mm
1CB1	Circuit breaker 30 A Fast trip

NOTE For safety reasons, any other internal fuse or circuit breaker is not operator accessible, and should only be replaced by Agilent-authorized personnel.

Fuse information on the rear of the instrument is the most up-to-date.

Gas Supplies

The installation of compressed or liquid gas supplies must comply with the rules and/or regulations imposed by the local authorities responsible for such use in the workplace.

The responsible body must carry out leakage tests necessary for safety on gas connections.

Liquid or gaseous argon and nitrogen may be used with the Agilent 700 Series ICP-OES system. Agilent recommends the use of liquid gases, which are usually higher purity, more convenient and cheaper per unit volume.

NOTE Either argon or nitrogen gas may be used as an optics purge gas on the Agilent 700 Series ICP-OES systems.

The main gas supply requirement is argon for supply to the plasma, nebulizer and optics interface purge. Gas is also required to purge the polychromator assembly, and this may be either argon or nitrogen. A separate gas line connects internally to the argon supply unless the optional nitrogen purge kit is fitted (either factory or field-fitted).

NOTE The nitrogen purge kit is fitted as standard on the Agilent 730 Series ICP-OES systems.

Table 8. Argon and nitrogen gas specifications

	Argon	Nitrogen (if nitrogen is used to purge the polychromator)
Purity	99.996%	99.996%
Oxygen	<5 ppm	<5 ppm
Nitrogen (argon only)	<20 ppm	-
Water vapor	<4 ppm	<4 ppm
Permissible pressure range	400–600 kPa (57–88 psi)	
Recommended pressure	550 kPa (80 psi) regulated	

Table 9. Typical flow rates for the Agilent 700 Series ICP-OES instruments

	Argon (with argon purge gas)	Nitrogen (as purge gas)
Standby mode	0.75 L/min	Nitrogen flow 0.45 L/min
Operational range (plasma on)	9–32.8 L/min	Argon flow 8.3–29.1 L/min Nitrogen flow 0.45–2.1 L/min
Typical flows		
Measuring wavelengths > 200 nm (poly boost off)	21 L/min	Argon flow 20.25 L/min Nitrogen flow 0.45 L/min
Measuring wavelengths < 200 nm (poly boost on)	24 L/min	Argon flow 20.25 L/min Nitrogen flow 2.1 L/min

The Agilent 700 Series ICP-OES is fitted with a PTFE gas supply hose, 1.8 meters (6 feet) in length fitted with 1/4 inch Swagelok hardware. Gas supply adapters are included with each instrument to connect the instrument to regulated gas supplies.

Storage Cylinder Instructions

Cylinders containing gas under pressure should be firmly secured to a rigid structure, and the storage area must be adequately ventilated.

Never locate gas cylinders near a source of ignition, or in a position that is subject to direct heat. Gas storage cylinders often incorporate a pressure release device, which will discharge the gas at a predetermined temperature, usually around 52 °C (125 °F).

If gases are to be plumbed from a remote storage area to the instrument site, ensure that the local outlets are fitted with stop valves, pressure gauges and suitable regulators, which are easily accessible to the instrument operator. The gas outlets must be provided within 1.5 meters (5 feet) of the instrument.

Cryogenic Liquids

Cryogenic liquid gases are stored under pressure at very low temperatures in Portable Liquid Cylinders (PLC).

WARNING

Extreme Cold

Contact with the super-cold liquid, gas or pipe surfaces can cause severe skin damage. The Portable Liquid Cylinders should be located in a shielded position, and all piping should be routed or covered to prevent skin contact.

For high gas flow rates and/or low ambient temperatures, it may be necessary to obtain sufficient gas pressure by passing the liquid through an external evaporator rather than use the internal pressure building facility of the PLCs.

Liquid argon and liquid nitrogen may *not* be stored for extended periods and often have special storage requirements. Contact your local authorities and cryogenic gas supplier for more detailed information on storage requirements and boil-off rates for local types of PLCs.

☑ After the gas requirements have been met, check the checklist box: *Gas supply (at specified purity), regulator, and gas lines are installed for argon and optional nitrogen.*

Water Cooling System

Agilent 700 Series ICP-OES instruments require a source of cooling water. The water cooling system needs to remove up to 200 watts for radial instruments and 950 watts for axial instruments. The cooling water is required for the load coil and camera Peltier assembly. Axial instruments also require cooling capacity for the sample cone interface. The instrument incorporates an in-line particulate filter and water flow sensor on the water supply line.

Provided that the flow rate can be maintained above 1.1 L/min, and maximum supply pressure is below 310 kPa (45 psi), the cooling water supply may be taken from an in-house domestic water system, if local regulations permit.

An alternative is to install a recirculating water cooler system. The system should provide cover for the reservoir to prevent evaporation and stop contamination by dust or other impurities. Algaecide should be used to prevent algae growth that may restrict the flow of cooling water through the system.

A recirculating water cooling system has the advantage of reducing the volume of water that will be required over the life of the instrument's operation. Because of the limited size of the water cooler's reservoir, in the case of accidental damage the amount of water damage that can occur will also be limited.

Specified models of the Lytron or Van der Heijden water coolers can be used and will ensure the continued delivery of temperature controlled coolant, at the correct pressure, with a minimum of long-term maintenance or operational expense.

The Agilent field service engineer will connect the Agilent 700 Series ICP-OES instrument to your water cooling system. Connection of the water cooling system to the spectrometer, installation and adjustment of the internal pressure regulator and cut-out valve (where fitted) are included as part of the system installation. Installation of the required power connections and unpacking of the cooler/recirculator must be performed prior to installation of the instrument.

NOTE The operation manual and mounting and assembly hardware for the cooling system is included in the water cooler packaging. Locate all of these articles before the pack is discarded.

Table 10. Agilent 700 Series ICP-OES cooling requirements

Cooling capacity	Axial system: 1 kW Radial system: 200 W
Flow rate	1.1 L/min (0.3 gpm) minimum
Recommended inlet temperature	20 °C (68 °F) (Maximum for Agilent 720/730 Series ICP-OES: 30 °C (86 °F) (Maximum for Agilent 710 Series ICP-OES: 45 °C (113 °F)
Minimum inlet pressure	55 kPa (8.0 psi)
Maximum inlet pressure	310 kPa (45 psi)

NOTE Pressure regulation is recommended for water cooling systems that may exceed the maximum permissible pressure of 310 kPa (45 psi) or may be subject to pressure fluctuations.

The instrument is equipped with a water flow sensor, which will stop operation of the plasma and camera Peltier assembly if the cooling water flow through the instrument drops below 1.1 L/min (0.3 gpm).

Recommended water cooling systems and pressure regulators are available from:

Table 11. Water cooler suppliers

Lytron	Van der Heijden
Main office: Lytron Inc. 55 Dragon Court Woburn, MA 01801 USA Phone +1 781-933-7300 Fax +1 781-935-4529 Website: www.lytron.com E-mail: info@lytron.com	Main office: Van der Heijden-Labortechnik GmbH P.O. Box 1153 D-32690 Dörentrup Brüderstraße 10 D-32694 Dörentrup Germany Phone: +49 52 65 - 9 45 52-0 Fax: +49 52 65 – 945 52-10 Website: www.van-der-heijden.de E-mail: info@van-der-heijden.de

CAUTION *Always* ensure the water cooling system is on before igniting the plasma.

Location

Many water coolers are designed to be located and operated indoors. Consult the water cooler's literature for more information before installing.

The coolant supply and return hoses of the Agilent 700 Series ICP-OES are 3.0 meters long (10 feet). The inner diameter of the return hose is 7 mm (1/4 inch). The inner diameter of the supply hose is 9.5 mm (3/8 inch). The supply and return connection to the water cooling source will require suitable metal barbs that accommodate these diameter hoses. For most countries, the appropriate barbs for connecting the instrument to the water coolers are included with the instrument in kit form.

Please see the Agilent website for part numbers for ordering additional hose by the meter and clamps: www.agilent.com

☑ After the water cooling requirements have been met, check the checklist box: *Water cooling/circulation system and power connections are set up.*

Waste Fluid Container

Operation of the Agilent 700 Series ICP-OES system requires the use of a drain vessel for the disposal of excess fluids and vapors from the spraychamber. Suitable tubing is supplied with the spectrometer for use with inorganic solvents. When using organic solvents, different drain tubing that is suitable for the solvent in use will be required.

A chemically inert container, not glass or of a narrow necked style, to hold minimum of two liters (four pints) of waste must be provided by the instrument user. It should be located underneath the sample compartment (or to the right side of the spectrometer), where it is protected by the bench and in full view of the operator.

☑ After the waste fluid container requirements have been met, check the checklist box: *Waste container appropriate for the chemical waste is prepared*.

Guidelines for Software Installation

Agilent recommends that you purchase a PC as part of the Agilent 700 Series ICP-OES package. The PC included in the package will come with the appropriate operating system as loaded by the PC supplier.

For instructions on installing the Microsoft Windows operating system, refer to the appropriate manuals supplied with the software. It is the responsibility of the customer to ensure that the operating system software has been installed and is functional if the customer is supplying the PC or the operating system.

NOTE Agilent will not assume responsibility for loss of data.

The Agilent service engineer will connect the PC to the spectrometer and any factory-approved accessories purchased at installation. Initial instrument software installation is also included as part of the system installation. For information on installing the Agilent 700 Series ICP-OES system software, consult the ICP Expert II software installation instructions for Microsoft Windows 7 Professional 64-bit SP1, Microsoft Windows XP 32-bit SP3 or the ICP Expert II CFR software installation instructions supplied with the instrument software.

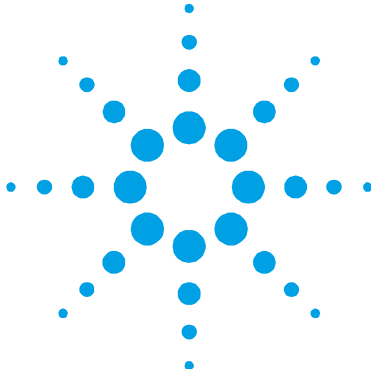

6. Accessories and Options

Organic Solvents or Hydrofluoric Acid 53
Auxiliary Gas Module 54
Gas Requirements 54
Cooled Spraychamber Organics Kit 55
Sample Preparation System (SPS 3) 56
Environmental Conditions 56
Vapor Generation Accessory Recommended Gases 56
SVS 1 Switching Valve System Accessory 57

Organic Solvents or Hydrofluoric Acid

If organic solvents or hydrofluoric acid are intended to be used with the instrument, then special tubing and fittings are required.

Please refer to the Agilent Technologies website for details and part number information.

NOTE The special fittings supplied for use with organic solvents and hydrofluoric acid may not be suitable for acidic or alkaline solvents. The standard (originally supplied) components should be retained for use in these applications.

Auxiliary Gas Module

The AGM 1 is an accessory used to introduce a small amount of oxygen into the plasma of an Agilent 700 Series ICP-OES.

The oxygen facilitates the analysis of volatile organics by ICP techniques by reducing carbon buildup and background signal resulting in lower detection limits when analyzing volatile organic solutions.

The AGM 1 is generally used in conjunction with the cooled spraychamber. This allows you to directly analyze, without dilution, organic solutions with a high vapor pressure at room temperature such as gasoline and naphtha. Cooling of the sample prevents high vapor pressures being generated in the spraychamber, which can cause back pressure in the chamber, destabilizing the plasma and suppressing the analytical signal.

The cooled spraychamber requires a cooler capable of cooling the spraychamber to approximately -10 °C. This cooler is *not* included with the AGM 1, cooled spraychamber or organics kits.

The AGM 1 unit features an on/off switch, a flow control knob and a flow indicator.

Gas Requirements

All gas supply installations must comply with rules and/or regulations that are imposed by the local authorities responsible for the use of compressed gas in the workplace.

Table 12. AGM 1 gas supply requirements

Permissible pressure range	300–700 kPa (43–101 psi)
Recommended pressure	300 kPa (43 psi)
Required flow rates	Up to 0.6 L/min

Cooled Spraychamber Organics Kit

The cooled spraychamber comes in a kit with tubing and attachments.

You will need to provide a cooler capable of cooling to approximately -10 °C and tubing to connect the cooler to the spraychamber.

The Organics kit will include the following components:

- Peristaltic pump tubing organics Black (sample)
- Peristaltic pump tubing organics Grey (drain)
- Transfer tubing for use with gasoline
- Nebulizer holder*
- O-ring (for nebulizer)*
- O-ring kit (for nebulizer holder)*
- Spraychamber tubing to drain
- Drain tubing
- Cooled spraychamber
- Mounting bracket
- Instruction sheet

* These items are assembled as one unit.

Sample Preparation System (SPS 3)

The SPS is compatible with a wide range of commercially available low-cost autoclavable sample racks.

Sample contamination from airborne particles is eliminated and corrosive or toxic fumes are removed during sampling with the optional environmental enclosure.

Environmental Conditions

The SPS accessory is suitable *only* for indoor use. The site should be selected to avoid dusty or corrosive atmospheres.

NOTE Extra maintenance may be required on the SPS if it is operated in excessively dusty or corrosive conditions.

An Agilent-supplied trolley is available for the SPS. A drain vessel must also be accommodated.

Vapor Generation Accessory Recommended Gases

The VGA is fitted with 6 mm (1/4 inch) internal diameter flexible hose for connection to a standard barbed tail connector, which must be supplied by the customer.

CAUTION The gas supply for the VGA must be a separate regulated line, to prevent exceeding the maximum inlet pressure to the VGA.

NOTE The VGA allows a 45 mL/min flow of argon to pass through it even when it is switched off. It is recommended that the argon gas line is fitted with a stop valve to shut off the gas supply to the VGA.

Table 13. VGA gas supply requirements

Permissible pressure range	300–400 kPa (42–57 psi)
Recommended pressure	325 kPa (46 psi)
Required flow rates	Up to 100 mL/min

SVS 1 Switching Valve System Accessory

The SVS 1 includes a 4-port switching valve that reduces analysis time by way of a more efficient sample introduction and rinsing system. It can be used with the following autosamplers:

- Agilent SPS 3
- CETAC ASX-510/510HS/520/520HS
  (Includes EXR-8, extended rack option)

The SVS 1 Accessory is supported with the ICP Productivity Package software, provided as standard with Agilent 730 Series ICP-OES instruments. The software is optional for Agilent 720 Series ICP-OES instruments.

This page is intentionally left blank.